SAVING LIVES THROUGH INNOVATION AND EDUCATION

Firestop Application Handbook 7th Edition



HILTI HASSLE-FREE SERVICES

Create Unique Values.



We measure our success in yours. Our comprehensive range of hassle-free services are designed to enhance your project delivery capabilities at every phase, so you remain competitive and ahead.

PLANNING & SPECIFYING

Engineering Service
supports hassle-free project planning.

E-service
places technical information at your fingertips.

Firestop Seminar
provide basic understanding in firestop application

BIM/CAD
technical drawings and standard BIM/CAD templates

Installation training.

INSTALLATION PHASE

Error-free and Green Installation Practice
enhances productivity and enables safe anchor and firestop installation.

Cordless Practice
elevates safety and productivity.

Direct Customer Relationship
helps you to deliver projects on-time.

Tool Lifetime Services
lowers your total cost of ownership for a lifetime.

POST INSTALLATION CONSULTATION

Engineering Service
supports project approval at your job site or office.

Documentation Management Software
increase the efficiency to document, manage and report compliance at every penetrations throughout your building.







Contents

1.	**Fire risk - overview**	**2-3**
2.	**User guide**	**4-5**
3.	**Drawing summary**	**6-7**
4.	**Application drawings**	**8-50**
4.1	Metal Pipe Penetration	9-11
4.2	Plastic Pipe Penetration	12-15
4.3	Insulated Pipe Penetration	16-20
4.4	Air Duct Damper Penetration	21-22
4.5	Cable Tray Penetration	23-25
4.6	Cable / Cable Bundle Penetration	26-30
4.7	Trunking Penetration	31-32
4.8	Bus Bar Penetration	33
4.9	Multiple Penetration	34-35
4.10	Sunken Plumbing Pipe Through Ducting Room Penetration	36
4.11	Curtain Wall Joint	37-38
4.12	Drywall Joint	39
4.13	Top of Wall Joint	40-41
4.14	Precast Facade Joint	42
4.15	Wall Tie Hole	43-45
4.16	Electrical Switch / Socket Box	46-47
4.17	Lift Door Frame / Switch Control / Control Cabinet	48-49
4.18	Timber / Steel Door Frame	50
5.	**Product information**	**51-79**
5.1	Firestop acrylic sealant CP 606	52
5.2	Firestop silicone sealant CP 601S	53
5.3	High performance intumescent firestop sealant FS-ONE MAX	54
5.4	Firestop Intumescent sealant CP 611A	55
5.5	Firestop joint spray CFS-SP WB	56
5.6	Firestop putty pad CP 617	57
5.7	Firestop cable disc CFS-D 1"	58
5.8	Firestop foam CP 620	59
5.9	Firestop foam CFS-F FX	60
5.10	Firestop block CFS-BL	61
5.11	Firestop composite sheet CFS-COS	62
5.12	Firestop mortar CP 636	63
5.13	Firestop board, coating CP 670	64
5.14	Firestop board CP 670	65
5.15	Firestop cushion CP 651N	66
5.16	Firestop bandage CFS-B	67
5.17	Firestop collar CP 643 N	68
5.18	Firestop collar CP 644	69
5.19	Firestop collar endless CFS-C EL	70
5.20	Firestop wrap strip CP 648-E	71
5.21	Firestop cast-in device CFS-CID	72
5.22	Firestop sleeve CFS-SL	73
5.23	Firestop cable coating CP 678	74
5.24	Dispenser foam CF125-50	75
5.25	Filling foam CF-F 750	76
5.26	Cleaner CFR 1	77
6.	**Additional test & approval summary**	78-79
7.	**Firestop Engineering Services**	80-81

IS FIRESTOPPING STILL TOO HOT FOR YOU TO HANDLE?

Hilti firestop systems provide simple and reliable solutions.

Hilti firestop systems make the sealing of openings for pipes and cable trays in fire compartment walls, floors and ceilings easier than ever before. Tested, approved and highly reliable, Hilti firestop products are tailored exactly to the needs of the electrical and mechanical trades.

Fire risk overview - electrical & mechanical

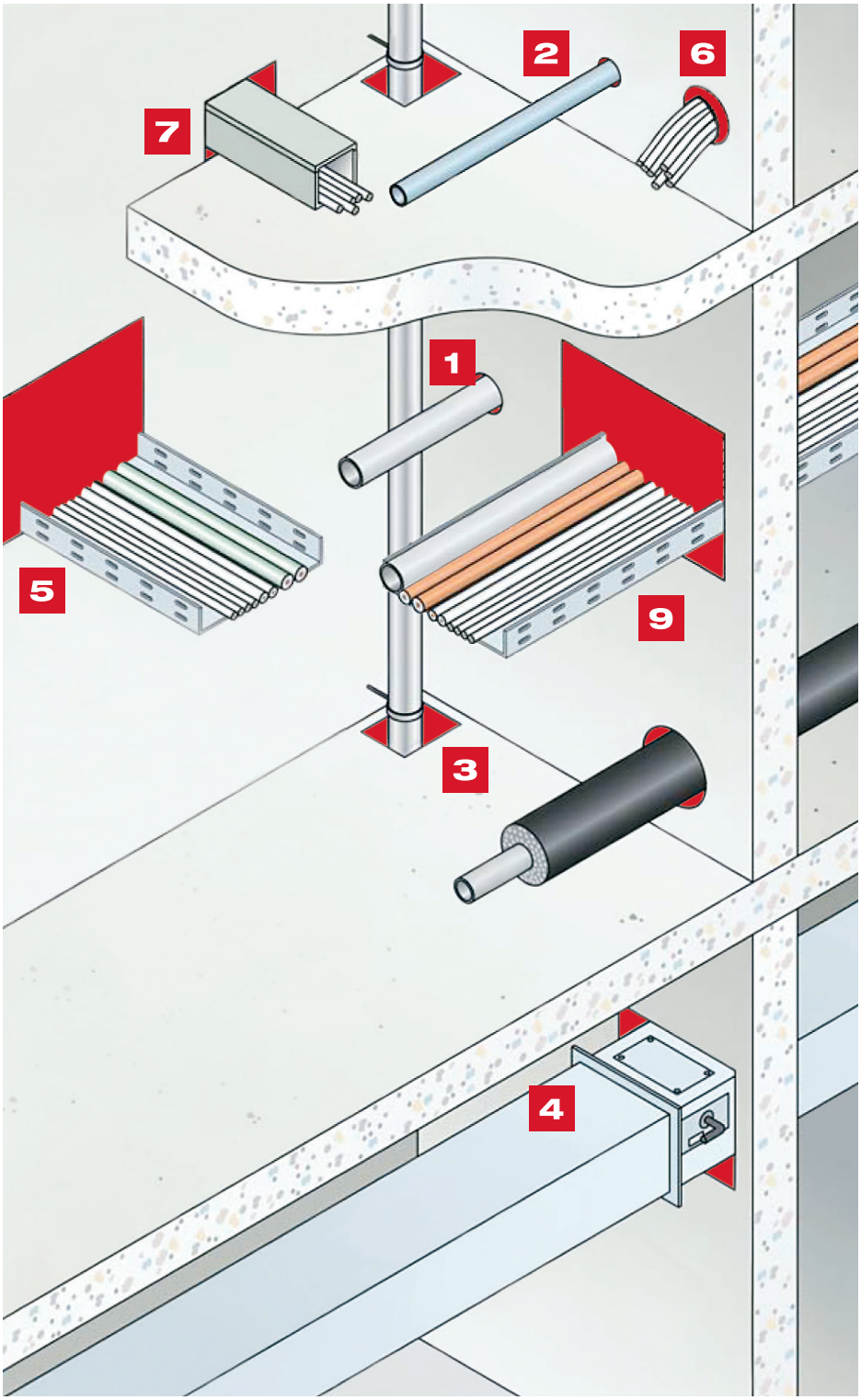

1 Metal pipe penetration (P.9 - 11)

2 Plastic pipe penetration (P.12 - 15)

3 Insulated pipe penetration (P.16 - 20)

4 Air duct damper penetration (P.21 - 22)

5 Cable tray penetration (P.23 - 25)

6 Cable / Cable bundle penetration (P.26 - 32)

7 Trunking penetration (P.33 - 34)

8 Busbar penetration (P.35)

9 Multiple penetration (P.36-37)

10 Sunken plumbing pipe penetration (P.38)

More than just passive fire prevention

Hilti firestop products are tested to provide you with more than firestopping. The following symbols help you identify the additional features that Hilti brings to the product.


Smoke /Gas Tightness

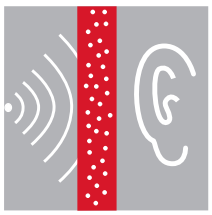
Acoustic Insulation


Water Tightness



Resistance to Aging*
(*see remark on Page 79)

Fire risk overview - architectural & internal finish

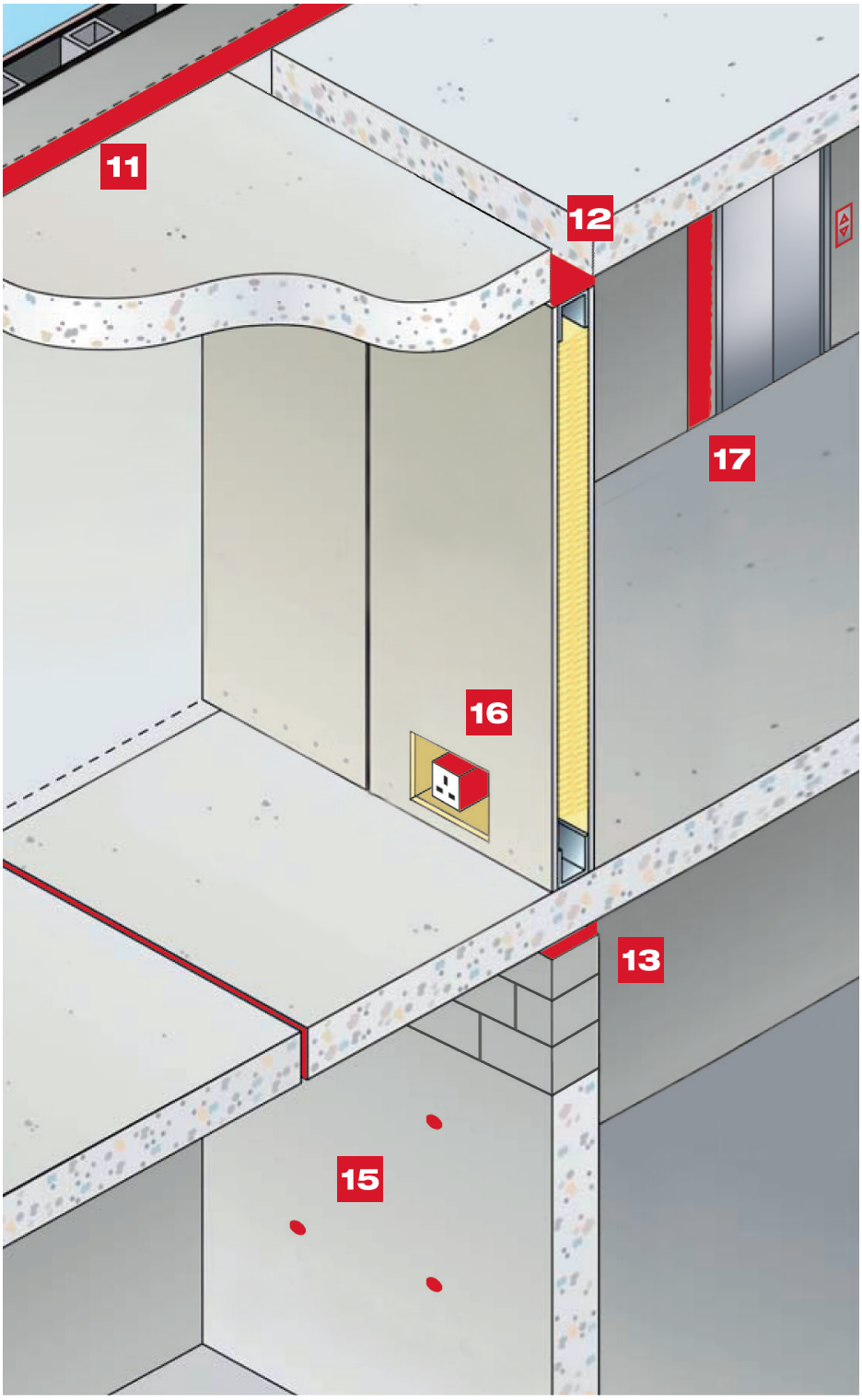

- 11 Curtain wall joint (P.38 - 39)
- 12 Drywall top of wall joint (P.40)
- 13 Blockwall top of wall joint (P.41 - 42)
- 15 Wall tie hole (P.44 - 46)
- 16 Socket box (P.47 - 48)
- 17 Lift door frame, call button and display indicator and control cabinet (P.49 - 50)

4 EASY STEPS TO COMPLETE FIRESTOP DESIGN & SUBMISSION

Step 1

Find the relevant number for your application(s)

Fire risk overview - electrical & mechanical

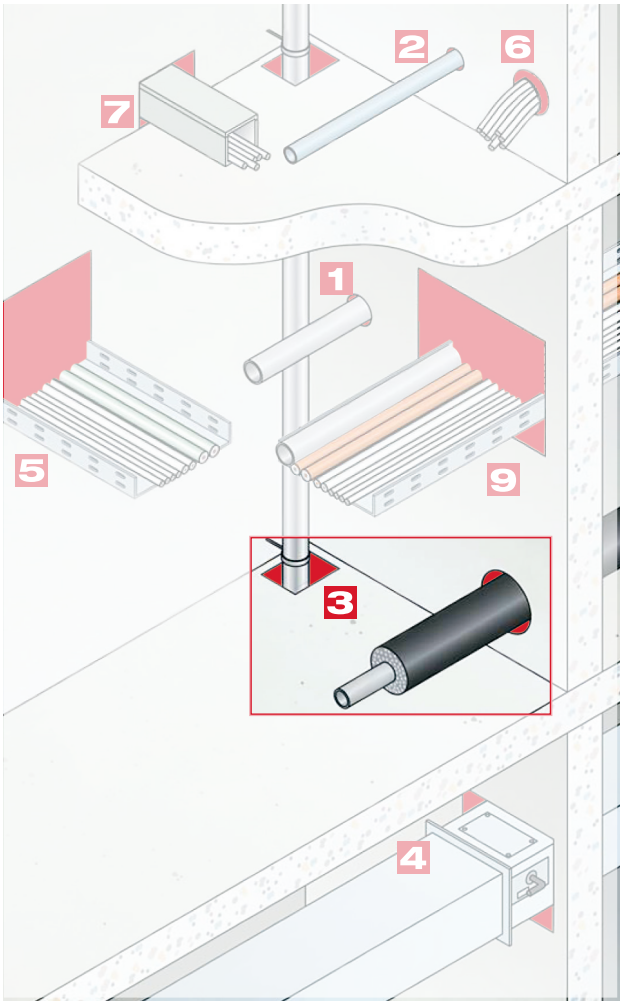

1. Metal pipe penetration (P.9 - 11)
2. Plastic pipe penetration (P.12 - 15)
3. Insulated pipe penetration (P.16 - 20)
4. Air duct damper penetration (P.21 - 22)
5. Cable tray penetration (P.23 - 25)
6. Cable / Cable bundle penetration (P.26 - 32)
7. Trunking penetration (P.33 - 34)
8. Busbar penetration (P.35)
9. Multiple penetration (P.36 - 37)
10. Sunken plumbing pipe penetration (P.38)

Step 2

Select the right application details

Turn to the page(s) with the application number on the side

3

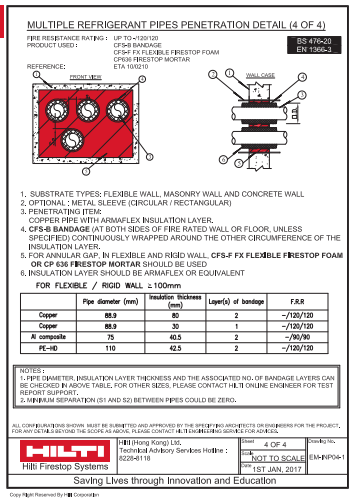

MULTIPLE REFRIGERANT PIPES PENETRATION DETAIL (4 OF 4)

FIRE RESISTANCE RATING : UP TO -/120/120
PRODUCT USED : CFS-B BANDAGE
CFS-F FX FLEXIBLE FIRESTOP FOAM
CP636 FIRESTOP MORTAR
ETA 10/0210

BS 476-20
EN 1366-3

REFERENCE:

1. SUBSTRATE TYPES: FLEXIBLE WALL, MASONRY WALL AND CONCRETE WALL
2. OPTIONAL : METAL SLEEVE (CIRCULAR / RECTANGULAR)
3. PENETRATING ITEM:
   COPPER PIPE WITH ARMAFLEX INSULATION LAYER.
4. **CFS-B BANDAGE** (AT BOTH SIDES OF FIRE RATED WALL OR FLOOR, UNLESS SPECIFIED) CONTINUOUSLY WRAPPED AROUND THE OTHER CIRCUMFERENCE OF THE INSULATION LAYER.
5. FOR ANNULAR GAP, IN FLEXIBLE AND RIGID WALL, **CFS-F FX FLEXIBLE FIRESTOP FOAM OR CP 636 FIRESTOP MORTAR** SHOULD BE USED
6. INSULATION LAYER SHOULD BE ARMAFLEX OR EQUIVALENT

FOR FLEXIBLE / RIGID WALL ≥ 100mm

	Pipe diameter (mm)	Insulation thickness (mm)	Layer(s) of bandage	F.R.R
Copper	88.9	80	2	-/120/120
Copper	88.9	30	1	-/120/120
Al composite	75	40.5	2	-/90/90
PE-HD	110	42.5	2	-/120/120

NOTES :
1. PIPE DIAMETER, INSULATION LAYER THICKNESS AND THE ASSOCIATED NO. OF BANDAGE LAYERS CAN BE CHECKED IN ABOVE TABLE. FOR OTHER SIZES, PLEASE CONTACT HILTI ONLINE ENGINEER FOR TEST REPORT SUPPORT.
2. MINIMUM SEPARATION (S1 AND S2) BETWEEN PIPES COULD BE ZERO.

ALL CONFIGURATIONS SHOWN MUST BE SUBMITTED AND APPROVED BY THE SPECIFYING ARCHITECTS OR ENGINEERS FOR THE PROJECT. FOR ANY DETAILS BEYOND THE SCOPE AS ABOVE, PLEASE CONTACT HILTI ENGINEERING SERVICE FOR ADVICE.

HILTI (Hong Kong) Ltd.
Technical Advisory Services Hotline : 8228-8118

Sheet 4 OF 4
Scale NOT TO SCALE
Date 1ST JAN. 2017
Drawing No. EM-PIP04-1

Hilti Firestop Systems

Saving Lives through Innovation and Education

Copy Right Reserved By Hilti Corporation

In case your application is not covered, please contact Hilti Fire Protection Specialist at (852) 8228 8118 for advice.

Check the details against site situation

Step 3

1 Floor/wall thickness 2 Opening size 3 Penetrating items

MULTIPLE REFRIGERANT PIPES PENETRATION DETAIL (4 OF 4)

B FIRE RESISTANCE RATING : UP TO -/120/120
PRODUCT USED : CFS-B BANDAGE
CFS-F FX FLEXIBLE FIRESTOP FOAM
CP636 FIRESTOP MORTAR

A BS 476-20
EN 1366-3

C REFERENCE: ETA 10/0210

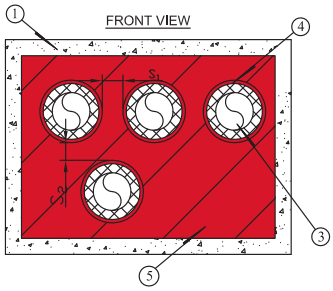

D

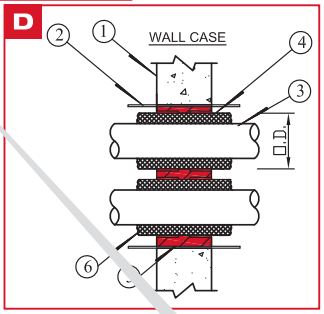

1. SUBSTRATE TYPES: FLEXIBLE WALL, MASONRY WALL AND CONCRETE WALL
2. OPTIONAL : METAL SLEEVE (CIRCULAR / RECTANGULAR)
3. PENETRATING ITEM:
   COPPER PIPE WITH ARMAFLEX INSULATION LAYER.
4. **CFS-B BANDAGE** (AT BOTH SIDES OF FIRE RATED WALL OR FLOOR, UNLESS SPECIFIED) CONTINUOUSLY WRAPPED AROUND THE OTHER CIRCUMFERENCE OF THE INSULATION LAYER.
5. FOR ANNULAR GAP, IN FLEXIBLE AND RIGID WALL, **CFS-F FX FLEXIBLE FIRESTOP FOAM OR CP 636 FIRESTOP MORTAR** SHOULD BE USED
6. INSULATION LAYER SHOULD BE ARMAFLEX OR EQUIVALENT

FOR FLEXIBLE / RIGID WALL ≥ 100mm

	Pipe diameter (mm)	Insulation thickness (mm)	Layer(s) of bandage	F.R.R
Copper	88.9	80	2	-/120/120
Copper	88.9	30	1	-/120/120
Al composite	75	40.5	2	-/90/90
PE-HD	110	42.5	2	-/120/120

NOTES :
1. PIPE DIAMETER, INSULATION LAYER THICKNESS AND THE ASSOCIATED NO. OF BANDAGE LAYERS CAN BE CHECKED IN ABOVE TABLE. FOR OTHER SIZES, PLEASE CONTACT HILTI ONLINE ENGINEER FOR TEST REPORT SUPPORT.
2. MINIMUM SEPARATION (S1 AND S2) BETWEEN PIPES COULD BE ZERO.

ALL CONFIGURATIONS SHOWN MUST BE SUBMITTED AND APPROVED BY THE SPECIFYING ARCHITECTS OR ENGINEERS FOR THE PROJECT. FOR ANY DETAILS BEYOND THE SCOPE AS ABOVE, PLEASE CONTACT HILTI ENGINEERING SERVICE FOR ADVICES.

Hilti Firestop Systems
Hilti (Hong Kong) Ltd.
Technical Advisory Services Hotline : 8228-8118
Sheet 4 OF 4
Scale NOT TO SCALE
Date 1ST JAN, 2017
E EM-INP04-1
Saving Lives through Innovation and Education

Copy Right Reserved By Hilti Corporation

A According to which standard

B FRR & involved products

C Fire test reports referred

D Seal-up details & special notes

E Hilti application details no.

ETA 10/0210

Refer these 2 sets of number in your shop drawing details

EM-INP04-1

Prepare for submission

Step 4

1 Submission folder (product catalogue, test reports,country of origin, MSDS, job ref.)

2 Supplementary test reports (if any)

3 Product samples

Hilti Fire Protection Specialist can help you prepare the full proposal, please call 8228-8118

DRAWING SUMMARY

Category	Application	
Electrical & Mechanical	1	Metal Pipe Penetration 1
	1	Metal Pipe Penetration 2
	1	Metal Pipe Penetration 3
	2	Plastic Pipe Penetraion 1
	2	Plastic Pipe Penetraion 2
	2	Plastic Pipe Penetraion 3
	2	Plastic Pipe Penetraion 4
	3	Insulated Pipe Penetration 1
	3	Insulated Pipe Penetration 2
	3	Insulated Pipe Penetration 3
	3	Insulated Pipe Penetration 4
	3	Insulated Pipe Penetration 5
	4	Air Duct Penetration 1
	4	Air Duct Penetration 2
	5	Cable Tray Penetration 1
	5	Cable Tray Penetration 2
	5	Cable Tray Penetration 3
	6	Cable / Cable Bundle Penetration 1
	6	Cable / Cable Bundle Penetration 2
	6	Cable / Cable Bundle Penetration 3
	6	Cable / Cable Bundle Penetration 4
	6	Cable / Cable Bundle Penetration 5
	6	Cable / Cable Bundle Penetration 6
	6	Cable / Cable Bundle Penetration 7
	7	Trunking Penetration 1
	7	Trunking Penetration 2
	8	Busbar Penetration
	9	Multiple Penetration 1
	9	Multiple Penetration 2
	10	Sunken Plumbing Pipe Through Ducting Room Penetration
Architectural & Internal Finish	11	Curtain Wall Joint Application 1
	11	Curtain Wall Joint Application 2
	12	Drywall Joint Application
	13	Top of Wall Joint Application 1
	13	Top of Wall Joint Application 2
	14	Precast Facade Joint Application
	15	Wall Tie Hole Application 1
	15	Wall Tie Hole Application 2
	15	Wall Tie Hole Application 3
	16	Electrical Switch / Socket Box Application 1
	16	Electrical Switch / Socket Box Application 2
	17	Lift Door Frame / Switch Control Application
	18	Lift Control Cabinet
	19	Timber / Steel Door Frame Joint Application

	FRR	Drawing No.	Page No.
	Up to -/240/36	EM-MTP01	Page 9
	Up to -/240/-	EM-MTP02	Page 10
	Up to -/240/12	EM-MTP03	Page 11
	Up to -/245/245	EM-PLP01	Page 12
	Up to -/120/-	EM-PLP02	Page 13
	Up to -/240/240	EM-PLP03	Page 14
	Up to -/240/-	EM-PLP04	Page 15
	Up to -/240/	EM-INP01	Page 16
	Up to -/240/240	EM-INP02	Page 17
	Up to -/120/120	EM-INP03	Page 18
	Up to -/120/120	EM-INP04-1	Page 19
	Up to -/120/120	EM-INP04-2	Page 20
	Up to -/125/122	EM-ADT01	Page 21
	Up to -/255/-	EM-ADT02	Page 22
	Up to -/240/86	EM-CBT01	Page 23
	Up to -/240/-	EM-CBT02	Page 24
	Up to -/120/-	EM-CBT02	Page 25
	Up to -/240/240	EM-CBB01	Page 26
	Up to -/120/120	EM-CBB02	Page 27
	Up to -/151/151	EM-CBB03	Page 28
	Up to -/120/120	EM-CBB04	Page 29
	Up to -/120/-	EM-CBB05	Page 30
	Up to -/120/-	EM-CBB06	Page 31
	Up to -/240/-	EM-CBB07	Page 32
	Up to -/120/120	EM-TKG01	Page 33
	Up to -/240/-	EM-TKG02	Page 34
	Up to -/240/23	EM-BB01	Page 35
	Up to -/264/209	EM-MOP01	Page 36
	Up to -/288/69	EM-MOP02	Page 37
	Up to -/120/-	EM-SPP01	Page 38
	Up to -/165/144	AI-CWJ01	Page 39
	Up to -/120/120	AI-CWJ02	Page 40
	Up to -/136/136	AI-TPW01	Page 41
	Up to -/242/242	AI-TOW01	Page 42
	Up to -/242/242	AI-TOW02	Page 43
	Up to -/240/240	AI-PFJ01	Page 44
	Up to -/157/37	AI-WTH01	Page 45
	Up to -/240/240	AI-WTH02	Page 46
	N/A	AI-WTH03	Page 47
	Up to -/240/240	AI-SKB01	Page 48
	Up to -/66/66	AI-SKB02	Page 49
	Up to -/120/120	AI-LDF01	Page 50
	Up to -/240/-	AI-LDF02	Page 51
	Up to -/240/120	AI-TDF01	Page 52

APPLICATION DRAWINGS

Leading-edge Technology.
Outstanding Service.



METAL PIPE PENETRATION DETAIL (1 OF 3)

FIRE RESISTANCE RATING : UP TO -/240/36
PRODUCT USED : CP 606 FIRESTOP ACRYLIC SEALANT
REFERENCE: RED R23A14-1A

BS 476-20
EN 1366-3

WALL CASE

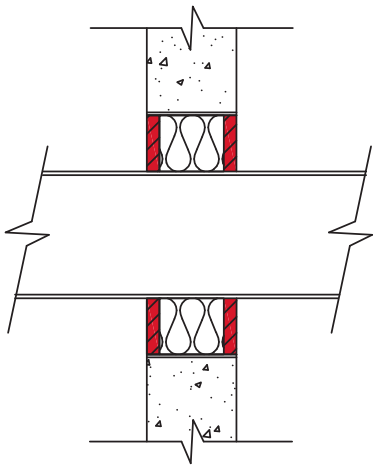

FLOOR CASE

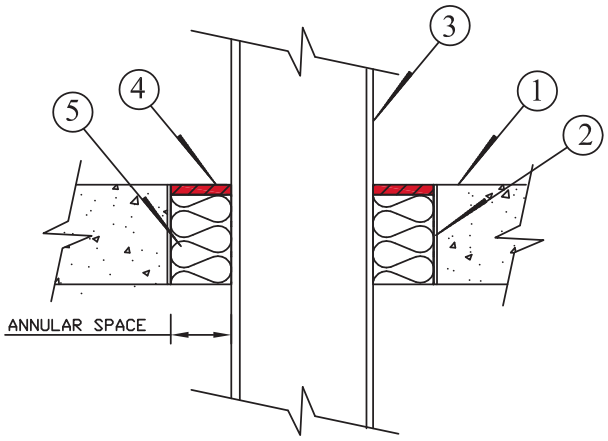

1. CONCRETE FLOOR OR WALL ASSEMBLY:
   A. CONCRETE WALL OR FIRE-RATED BLOCKWALL.
   B. CONCRETE FLOOR.
2. OPTIONAL : METAL SLEEVE.
3. PENETRATING ITEM: STEEL / CAST / D.I. / COPPER PIPE (SEE NOTE 1)
4. **CP 606 FIRESTOP ACRYLIC SEALANT** (SEE NOTE 2)
5. MINIMUM 60 mm THICKNESS MINERAL WOOL (MINIMUM 140kg/m^3 DENSITY) TIGHTLY PACKED AND FULLY FILLED ACROSS THE ANNULAR SPACE.

	STEEL PIPE	CAST/ D.I. PIPE	COPPER PIPE
MAX. PIPE DIAMETER (mm)	200	200	50
MAX. ANNULAR GAP (mm)	30	30	40
MIN. DEPTH OF **CP 606 FIRESTOP ACRYLIC SEALANT** (mm)	15	15	15

NOTES :
1. MINIMUM DIAMETER OF THE COPPER PIPE CAN BE INCREASED TO 200mm IF THE F.R.R. IS REDUCED TO -/120/12.
2. **CP 606 FIRESTOP ACRYLIC SEALANT** IS REQUIRED ON BOTH SIDES OF A WALL ASSEMBLY.

ALL CONFIGURATIONS SHOWN MUST BE SUBMITTED AND APPROVED BY THE SPECIFYING ARCHITECTS OR ENGINEERS FOR THE PROJECT. FOR ANY DETAILS BEYOND THE SCOPE AS ABOVE, PLEASE CONTACT HILTI ENGINEERING SERVICE FOR ADVICES.

Hilti Firestop Systems

Hilti (Hong Kong) Ltd.
Technical Advisory Services Hotline : 8228-8118

Sheet 1 OF 3
Scale NOT TO SCALE
Date FEB 2023

Drawing No. EM-MTP01-R

Saving Lives through Innovation and Education

Copy Right Reserved By Hilti Corporation

1

METAL PIPE PENETRATION DETAIL (2 OF 3)

FIRE RESISTANCE RATING : UP TO -/240/-
PRODUCT USED : CP 606 FIRESTOP ACRYLIC SEALANT
CF F 750 FOAM

BS 476-20
EN 1366-3

REFERENCE: RED R23A14-1A

WALL CASE

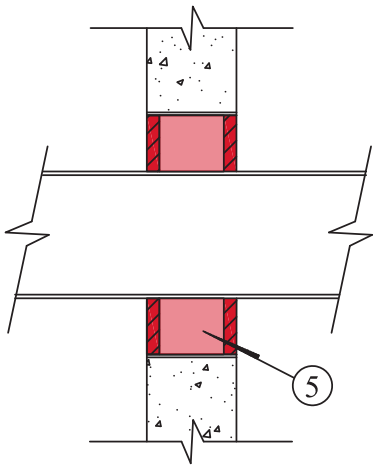

FLOOR CASE

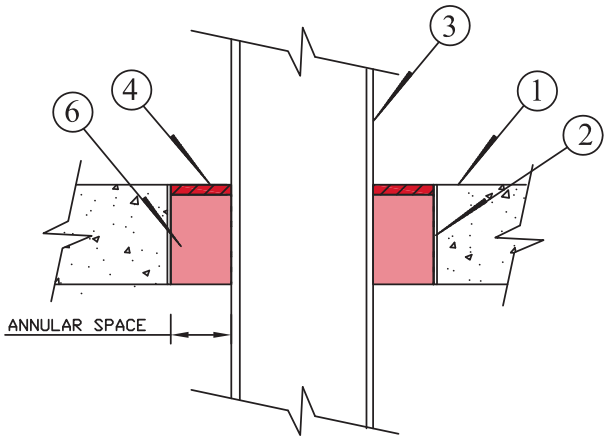

1. CONCRETE FLOOR OR WALL ASSEMBLY:
   A. CONCRETE WALL OR FIRE-RATED BLOCKWALL.
   B. CONCRETE FLOOR.
2. OPTIONAL : METAL SLEEVE.
3. PENETRATING ITEM: STEEL
4. **CP 606 FIRESTOP ACRYLIC SEALANT** (SEE NOTE 1)
5. **CF F 750 FOAM** (SEE APPLICATION DETAIL) OR MINERAL WOOL AS BACKING MATERIAL ONLY

Application Details

WALL CASE		
	STEEL PIPE	F.R.R.
MAX. PIPE DIAMETER (mm)	138	-/240/240
MAX. ANNULAR GAP (mm)	10	
MIN. DEPTH OF **CP 606 FIRESTOP ACRYLIC SEALANT** (mm)	10	
DEPTH OF BACKING MATERIAL **CF-F 750 FOAM** (mm)	FULLY FILL	

FLOOR CASE		
	STEEL PIPE	F.R.R.
MAX. PIPE DIAMETER (mm)	600	-/240/-
MAX. ANNULAR GAP (mm)	20	
MIN. DEPTH OF **CP 606 FIRESTOP ACRYLIC SEALANT** (mm)	15	
DEPTH OF BACKING MATERIAL **CF750**(mm)	FULLY FILL	

NOTES :
1. **CP 606 FIRESTOP ACRYLIC SEALANT** IS REQUIRED ON BOTH SIDES OF A WALL ASSEMBLY.

ALL CONFIGURATIONS SHOWN MUST BE SUBMITTED AND APPROVED BY THE SPECIFYING ARCHITECTS OR ENGINEERS FOR THE PROJECT. FOR ANY DETAILS BEYOND THE SCOPE AS ABOVE, PLEASE CONTACT HILTI ENGINEERING SERVICE FOR ADVICES.

Hilti Firestop Systems

Hilti (Hong Kong) Ltd.
Technical Advisory Services Hotline :
8228-8118

Sheet 2 OF 3
Scale NOT TO SCALE
Date FEB 2023

Drawing No. EM-MTP02-R

Saving Lives through Innovation and Education

Copy Right Reserved By Hilti Corporation

METAL PIPE PENETRATION DETAIL (3 OF 3)

FIRE RESISTANCE RATING : UP TO -/240/12
PRODUCT USED : CP 601S FIRESTOP SILICONE SEALANT
REFERENCE: RED R23A14-1A

BS 476-20
EN 1366-3

WALL CASE

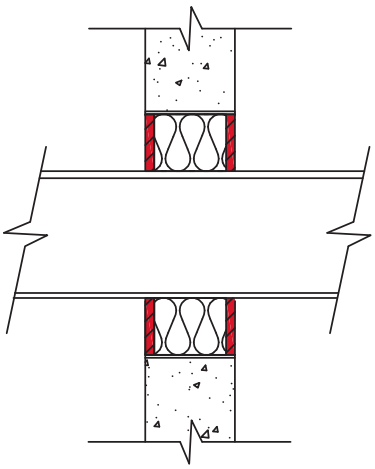

FLOOR CASE

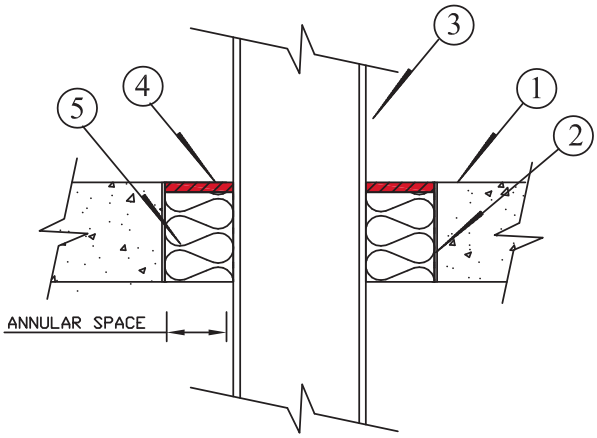

1. CONCRETE FLOOR OR WALL ASSEMBLY:
   A. CONCRETE WALL OR FIRE-RATED BLOCKWALL.
   B. CONCRETE FLOOR.
2. OPTIONAL : METAL SLEEVE.
3. PENETRATING ITEM: STEEL / CAST / D.I. / COPPER PIPE (SEE NOTE 1)
4. **CP 601S FIRESTOP SILICONE SEALANT** (SEE NOTE 2, 3 & 4)
5. MINERAL WOOL THICKNESS OF MINIMUM 60mm FOR WALL AND MINIMUM 100mm FOR FLOOR (MINIMUM 100kg/m^3 DENSITY) TIGHTLY PACKED AND FULLY FILLED ACROSS THE ANNULAR SPACE.

	STEEL PIPE	CAST/ D.I. PIPE	COPPER PIPE
MAX. PIPE DIAMETER (mm)	200	200	50
MAX. ANNULAR GAP (mm)	40	40	40
MIN. DEPTH OF **CP 601S FIRESTOP SILICONE SEALANT** (mm)	15	15	15

NOTES :
1. MAXIMUM DIAMETER OF THE COPPER PIPE CAN BE INCREASED TO 200mm IF THE F.R.R. IS REDUCED TO -/120/12.
2. FOR WALL PENETRATION, THE F.R.R. IS REDUCED TO -/157/12.
3. THE HARDNESS OF CP 601S FIRESTOP SILICONE SEALANT IS UP TO MIN. 30 SHORE A INDEX. (TEST REPORT IS AVAILABLE UPON REQUEST)
4. THE MOVEMENT CAPACITY OF CP 601S FIRESTOP SILICONE SEALANT CAN ACCOMMODATE UP TO +/- 25%. (TEST REPORT IS AVAILABLE UPON REQUEST)

ALL CONFIGURATIONS SHOWN MUST BE SUBMITTED AND APPROVED BY THE SPECIFYING ARCHITECTS OR ENGINEERS FOR THE PROJECT. FOR ANY DETAILS BEYOND THE SCOPE AS ABOVE, PLEASE CONTACT HILTI ENGINEERING SERVICE FOR ADVICES.

Hilti Firestop Systems

Hilti (Hong Kong) Ltd.
Technical Advisory Services Hotline : 8228-8118

Sheet 3 OF 3
Scale NOT TO SCALE
Date FEB 2023

Drawing No. EM-MTP03-R

Saving Lives through Innovation and Education

Copy Right Reserved By Hilti Corporation

CABLE TRAY PENETRATION DETAIL (1 OF 3)

FIRE RESISTANCE RATING : UP TO -/240/86 (SEE NOTES 2)
PRODUCT USED : CP636 FIRESTOP MORTAR
CP 611A FIRESTOP INTUMESCENT SEALANT

REFERENCE: RED R22H09-1A

BS 476-20
EN 1366-3

TOP VIEW / SIDE VIEW

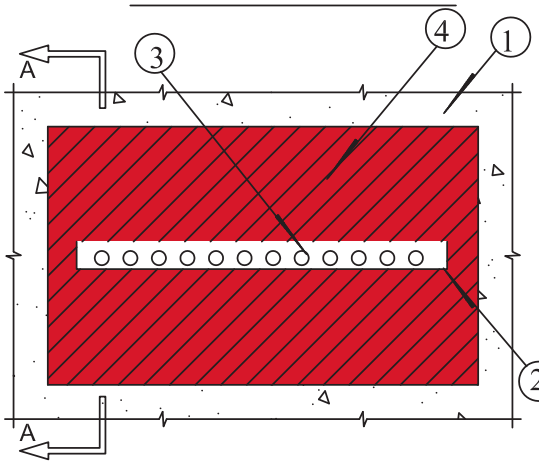

SECTION A-A
(FLOOR)

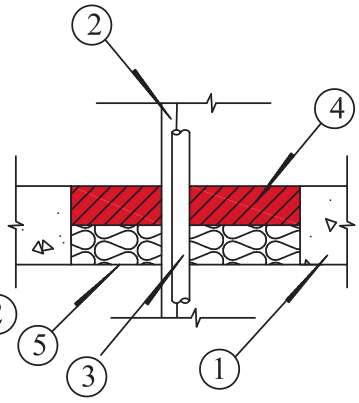

SECTION A-A
(WALL)

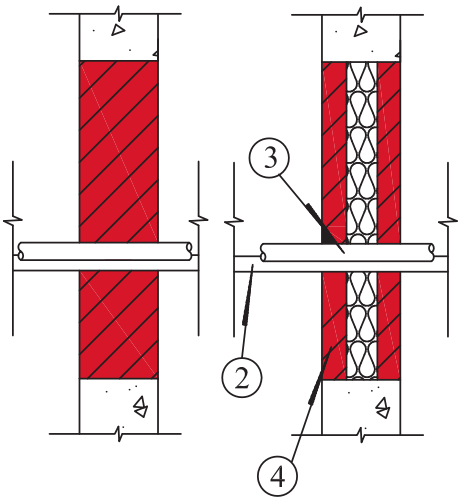

1. CONCRETE FLOOR OR WALL ASSEMBLY:
   A. CONCRETE WALL OR FIRE-RATED BLOCKWALL.
   B. CONCRETE FLOOR.
2. METAL CABLE TRAY(S).
3. ELECTRIC CABLE(S).
4. SEE TABLE BELOW FOR SIZE OF OPENING AND APPLICATION THICKNESS OF MINERAL WOOL AND CP636 FIRESTOP MORTAR.
5. MINERAL WOOL. (MIN 160kg/m^3 DENSITY)

	MAX. SIZE OF OPENING FOR F.R.R. -/120/-	MAX. SIZE OF OPENING FOR F.R.R. -/240/-
WALL CASE	1200mm x 2000mm. (MIN. WALL THICKNESS = 150mm) FULL FILLED OR AT LEAST 150mm WITH CP636 FIRESTOP MORTAR	600mm x 600mm. (MIN. WALL THICKNESS = 120mm) USE 50mm THICK MINERAL WOOL (MIN. 160kg/m^3 DENSITY AS BACKING MATERIAL AND FILL WITH 35mm THICK CP636 FIRESTOP MORTAR ON BOTH SIDES OF THE MINERAL WOOL OR FULLY FILLED OR AT LEAST WITH 100mm CP636 FIRESTOP MORTAR AND COAT WITH 0.5mm THICK CP611A INTUMESCENT FIRESTOP MASTIC AROUND THE CABLE OVER A DISTANCE OF 30mm LENGTH AT THE MIDDLE OF THE PENETRATION
FLOOR CASE	1000mm x 600mm. (MIN. FLOOR THICKNESS = 150mm) FILLED WITH 150mm CP636 FIRESTOP MORTAR	600mm x 600mm. USE CP636 FIRESTOP MORTAR WITH 75mm THICK MINERAL WOOL OF 50mm AND 160kg/m^3 DENSITY AS BACKING FORMWORK

ALL CONFIGURATIONS SHOWN MUST BE SUBMITTED AND APPROVED BY THE SPECIFYING ARCHITECTS OR ENGINEERS FOR THE PROJECT. FOR ANY DETAILS BEYOND THE SCOPE AS ABOVE, PLEASE CONTACT HILTI ENGINEERING SERVICE FOR ADVICES.

Hilti Firestop Systems

Hilti (Hong Kong) Ltd.
Technical Advisory Services Hotline :
8228-8118

Sheet 1 OF 3
Scale NOT TO SCALE
Date FEB 2023

Drawing No. EM-CBT01-R

Saving Lives through Innovation and Education

Copy Right Reserved By Hilti Corporation

CABLE TRAY PENETRATION DETAIL (2 OF 3)

FIRE RESISTANCE RATING: UP TO -/240/-
PRODUCT USED: CP 670 FIRE SAFETY COATING
CP 606 FIRESTOP ACRYLIC SEALANT
REFERENCE: RED R22H09-1A

BS 476-20
EN 1366-3

SIDE VIEW / TOP VIEW

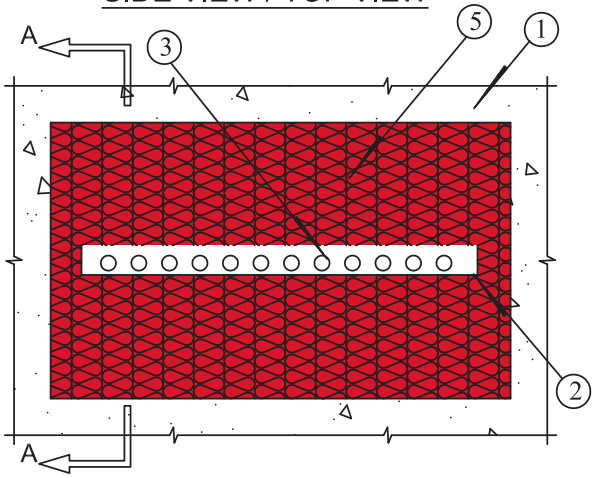

SECTION A-A (FLOOR)

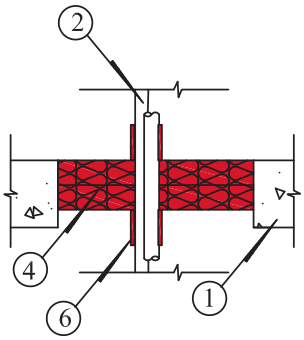

SECTION A-A (WALL)

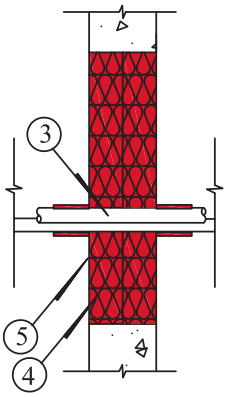

1. CONCRETE FLOOR OR WALL ASSEMBLY:
   A. CONCRETE WALL OR FIRE-RATED BLOCKWALL.
   B. CONCRETE FLOOR.
2. METAL CABLE TRAY(S).
3. ELECTRIC CABLE(S).
4. DOUBLE LAYERED (50mm THICKNESS EACH) MINERAL WOOL BOARD (MIN. 160kg/m^3 DENSITY)
5. MIN. 0.7mm (DRY) THICKNESS **CP670 FIRE SAFETY COATING** APPLIED ON BOTH SIDES OF THE MINERAL WOOL BOARD.
6. MIN. 150mm COAT BACK OF **CP670 FIRE SAFETY COATING** APPLIED ON BOTH SIDES OF THE CABLE AND CABLE TRAY PENETRATION.
7. FOR FLOOR APPLICATION OF SPAN OVER 2m, INTERMEDIATE SUPPORT(S) UNDER **CP670 FIRE SAFETY COATING** AT MAXIMUM INTERVAL OF 2m SHOULD BE PROVIDED BY CONTRACTOR.

	Layer(s) of mineral wool board	Max. size of opening for F.R.R. -/120/-	Max. size of opening for F.R.R. -/240/-
Wall Case	1	3600mm x 2000mm (OR EQUIVALENT AREA)	
	2		3600mm x 2000mm (OR EQUIVALENT AREA)
Floor Case	2	3600mm x 2000mm (OR EQUIVALENT AREA) FOR APPLICATION OF SPAN OVER 2m, INTERMEDIATE SUPPORT(S) UNDER CP 670 AT MAXIMUM OF 2m, SHOULD BE PROVIDED BY CONTRACTOR	600mm x 600mm (OR EQUIVALENT AREA)

ALL CONFIGURATIONS SHOWN MUST BE SUBMITTED AND APPROVED BY THE SPECIFYING ARCHITECTS OR ENGINEERS FOR THE PROJECT. FOR ANY DETAILS BEYOND THE SCOPE AS ABOVE, PLEASE CONTACT HILTI ENGINEERING SERVICE FOR ADVICES.

Hilti Firestop Systems

Hilti (Hong Kong) Ltd.
Technical Advisory Services Hotline : 8228-8118

Sheet 2 OF 3
Scale NOT TO SCALE
Date FEB 2023

Drawing No. EM-CBT02-R

Saving Lives through Innovation and Education

Copy Right Reserved By Hilti Corporation

CABLE TRAY PENETRATION DETAIL (3 OF 3)

FIRE RESISTANCE RATING: UP TO -/120/-
PRODUCT USED: CFS-F FX FIRESTOP FOAM
REFERENCE: RED R22H09-1A

BS 476-20
EN 1366-3

SIDE VIEW / TOP VIEW

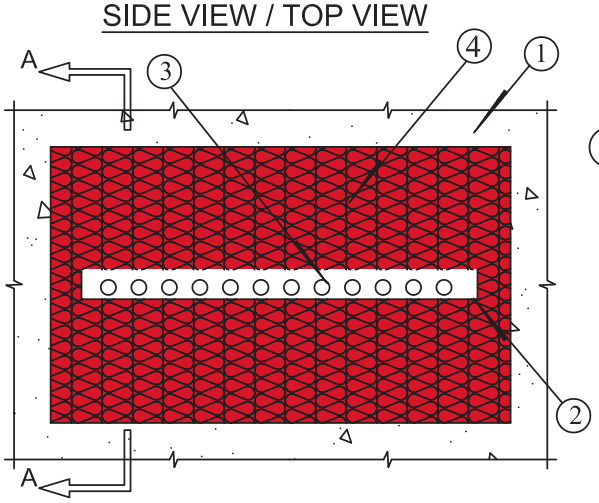

SECTION A-A (FLOOR)

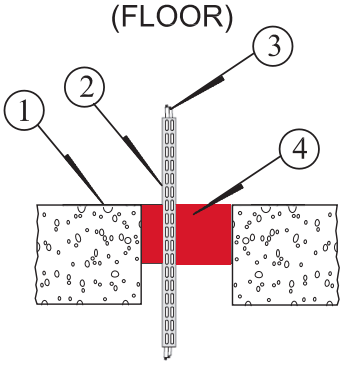

SECTION A-A (WALL)

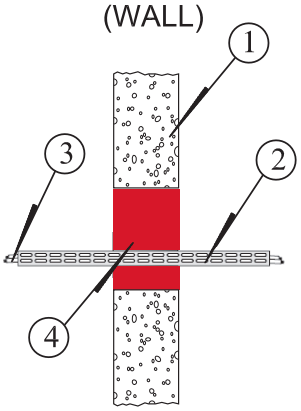

1. CONCRETE FLOOR OR WALL ASSEMBLY:
   A. CONCRETE WALL OR FIRE-RATED BLOCKWALL.
   B. CONCRETE FLOOR.
2. METAL CABLE TRAY(S).
3. ELECTRIC CABLE(S).
4. **CFS-F FX FIRESTOP FOAM**

	Thickness of CFS-F FX	Max. opening size	F.R.R.
Wall Case	100mm	600mm x 600mm	-/120/-
Floor Case	150mm	600mm x 600mm	-/120/-

ALL CONFIGURATIONS SHOWN MUST BE SUBMITTED AND APPROVED BY THE SPECIFYING ARCHITECTS OR ENGINEERS FOR THE PROJECT.
FOR ANY DETAILS BEYOND THE SCOPE AS ABOVE, PLEASE CONTACT HILTI ENGINEERING SERVICE FOR ADVICES.

Hilti Firestop Systems

Hilti (Hong Kong) Ltd.
Technical Advisory Services Hotline : 8228-8118

Sheet 3 OF 3
Scale NOT TO SCALE
Date FEB 2023

Drawing No. EM-CBT02-R

Saving Lives through Innovation and Education

Copy Right Reserved By Hilti Corporation

TRUNKING PENETRATION DETAILS (1 OF 2)

FIRE RESISTANCE RATING: UP TO -/120/-
PRODUCT USED: CFS-BL FIRESTOP BLOCK
CFS-F FX FIRESTOP FOAM
CP 606 FIRESTOP ACRYLIC SEALANT,
CP670 FIRE SAFETY COATING
REFERENCE: RED R22H09-1A

BS 476-20
EN 1366-3

FLOOR CASE

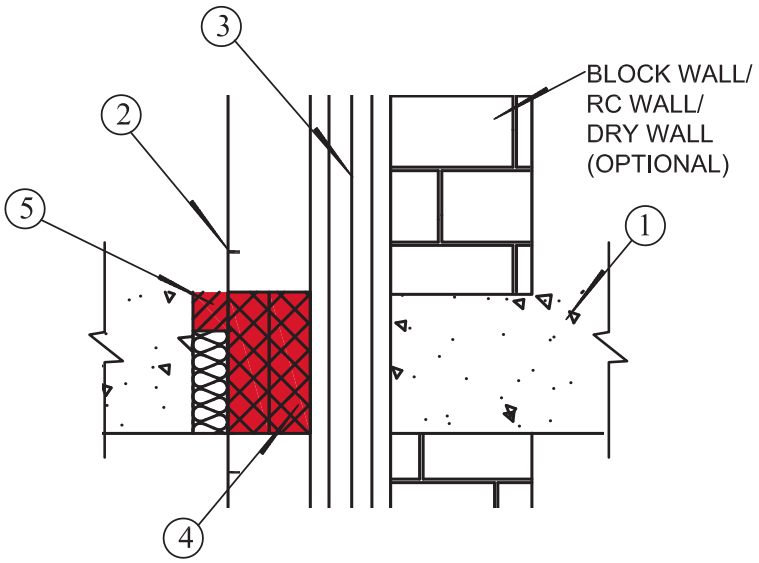

WALL CASE

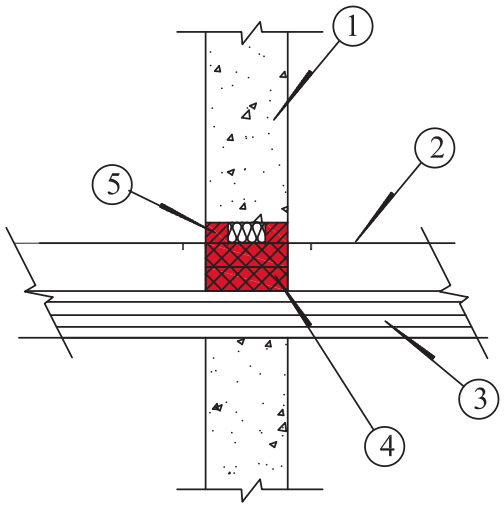

1. CONCRETE FLOOR OR WALL ASSEMBLY.
2. NOMINAL 100mm X 100mm METAL TRUNKING.
3. AGGREGATE CROSS-SECTIONAL AREA OF CABLE INSIDE TRUNKING TO BE **MAXIMUM 60% OF THE CROSS-SECTIONAL AREA** OF THE TRUNKING.
4. **CFS-BL FIRESTOP BLOCK** FILLED INSIDE TRUNKING.
5. FOR ANNULAR SPACE ≤ 30mm, FILL THE VOID UP BY MINERAL WOOL WITH MINIMUM 15mm DEPTH **CP 606 FIRESTOP ACRYLIC SEALANT** ON THE TOP SIDE OF THE FLOOR ASSEMBLY. OTHERWISE, VOIDS TO BE FILLED UP BY **CP670 FIRE SAFETY COATING** (SEE NOTE 1)

	Thickness of CFS-BL	Max. opening size	F.R.R.
Wall Case	200mm	200(mm)x 200(mm)	-/120/-
Floor Case	200mm	200(mm)x 200(mm)	-/120/-

NOTES :
1. MINIMUM 15mm DEPTH **CP 606 FIRESTOP ACRYLIC SEALANT** ON BOTH SIDES OF THE WALL ASSEMBLY.

ALL CONFIGURATIONS SHOWN MUST BE SUBMITTED AND APPROVED BY THE SPECIFYING ARCHITECTS OR ENGINEERS FOR THE PROJECT. FOR ANY DETAILS BEYOND THE SCOPE AS ABOVE, PLEASE CONTACT HILTI ENGINEERING SERVICE FOR ADVICES.

Hilti Firestop Systems

Hilti (Hong Kong) Ltd.
Technical Advisory Services Hotline :
8228-8118

Sheet 1 OF 2
Scale NOT TO SCALE
Date FEB 2023

Drawing No.
EM-TKG01-R

Saving Lives through Innovation and Education

Copy Right Reserved By Hilti Corporation

NEW

TRUNKING PENETRATION DETAILS (2 OF 2)

FIRE RESISTANCE RATING: UP TO -/120/-
PRODUCT USED: CFS-F FX FIRESTOP FOAM
CP 606 FIRESTOP ACRYLIC SEALANT,
CP670 FIRE SAFETY COATING
REFERENCE: RED R22H09-1A

BS 476-20
EN 1366-3

FLOOR CASE

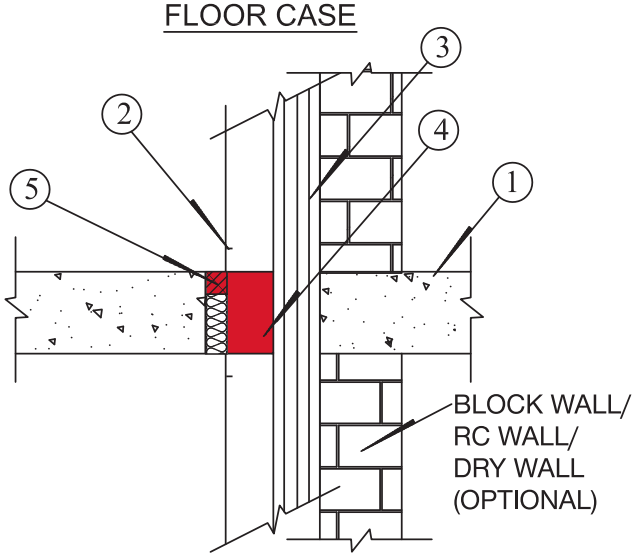

WALL CASE

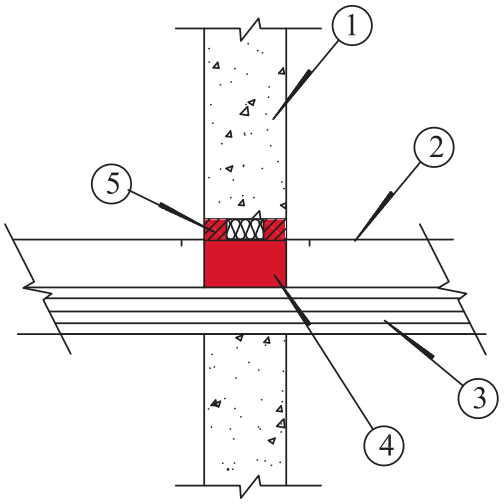

1. CONCRETE FLOOR OR WALL ASSEMBLY.
2. NOMINAL 200mm X 200mm METAL TRUNKING.
3. AGGREGATE CROSS-SECTIONAL AREA OF CABLE INSIDE TRUNKING TO BE **MAXIMUM 60% OF THE CROSS-SECTIONAL AREA** OF THE TRUNKING.
4. **CFS-F FX FIRESTOP FOAM** FILLED INSIDE TRUNKING.

	Thickness of CFS-F FX	Trunking size	F.R.R.
Wall Case	200mm	200mm x 200mm	-/120/-
Floor Case	150mm	200mm x 200mm	-/120/-

5. FOR ANNULAR SPACE ≤ 30mm, FILL THE VOID UP BY MINERAL WOOL WITH MINIMUM 15mm DEPTH CP 606 FIRESTOP ACRYLIC SEALANT ON THE TOP SIDE OF THE FLOOR ASSEMBLY, OTHERWISE, VOIDS TO BE FILLED UP BY CP670 FIRE SAFETY COATING (SEE NOTES 1).

NOTES :
1. MINIMUM 15mm DEPTH **CP 606 FIRESTOP ACRYLIC SEALANT** ON BOTH SIDES OF THE WALL ASSEMBLY.

ALL CONFIGURATIONS SHOWN MUST BE SUBMITTED AND APPROVED BY THE SPECIFYING ARCHITECTS OR ENGINEERS FOR THE PROJECT. FOR ANY DETAILS BEYOND THE SCOPE AS ABOVE, PLEASE CONTACT HILTI ENGINEERING SERVICE FOR ADVICES.

Hilti Firestop Systems

Hilti (Hong Kong) Ltd.
Technical Advisory Services Hotline :
8228-8118

Sheet 2 OF 2
Scale NOT TO SCALE
Date FEB 2023

Drawing No.
EM-TKG02-R

Saving Lives through Innovation and Education

Copy Right Reserved By Hilti Corporation

MULTIPLE PENETRATION APPLICATION DETAIL (1 OF 2)

FIRE RESISTANCE RATING: UP TO -/264/120
PRODUCT USED: CP 670 FIRE SAFETY COATING
CP 606 FIRESTOP ACRYLIC SEALANT
REFERENCE: RED R22H09-1A

BS 476-20
EN 1366-3

SIDE VIEW / TOP VIEW

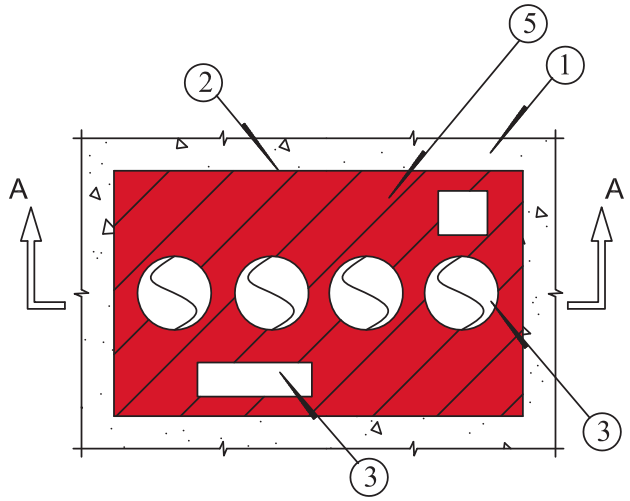

SECTION A-A
(FLOOR)

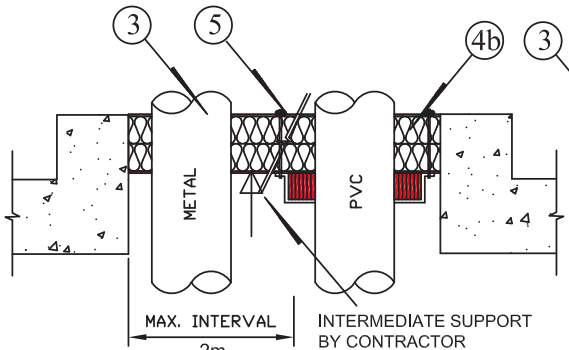

SECTION A-A
(WALL)

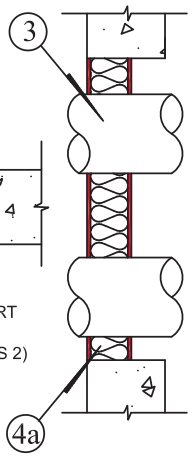

1. CONCRETE FLOOR OR WALL ASSEMBLY (240/240/240 F.R.R.):
   A. CONCRETE WALL OR FIRE-RATED BLOCKWALL (MIN. 100mm THICKNESS).
   B. CONCRETE FLOOR (MIN. 150mm THICKNESS).
2. MARKING OUT OPENING ZONE. (SEE NOTES 1)
3. PENETRATING ITEM(S) TO BE ONE OR SEVERAL OF THE FOLLOWING:
   - COPPER PIPES, STEEL PIPES, STEEL TRUNKING, CABLE TRAYS & PVC-U PIPES
4. (a) SINGLE LAYERED (50mm THICKNESS) MINERAL WOOL BOARD (MIN. 160kg/m^3 DENSITY)
   (b) DOUBLE LAYERED (50mm THICKNESS EACH) MINERAL WOOL BOARD (MIN. 160kg/m^3 DENSITY)
5. MINIMUM 0.7mm (DRY) THICKNESS **CP670 FIRE SAFETY COATING** APPLIED ON BOTH SIDES OF THE MINERAL WOOL BOARD.

NOTES :
1. MAXIMUM SIZE OF OPENING (WALL) = 3600mmx2000mm (OR EQUIVALENT AREA)
   (FLOOR) = 3600mmx2000mm (OR EQUIVALENT AREA)
2. FOR FLOOR APPLICATION OF SPAN OVER 2m, INTERMEDIATE SUPPORT(S) UNDER **CP670 FIRE SAFETY COATING** AT MAXIMUM INTERVAL OF 2m SHOULD BE PROVIDED BY CONTRACTOR.
3. GAPS BETWEEN MINERAL WOOL BOARD AND CONCRETE/METAL SLEEVES TO BE FULLY FILLED BY **CP 606 FIRESTOP ACRYLIC SEALANT.**
4. FIRESTOP JOINTS INSIDE THE METAL SLEEVES TO BE CONSIDERED SEPERATELY.

ALL CONFIGURATIONS SHOWN MUST BE SUBMITTED AND APPROVED BY THE SPECIFYING ARCHITECTS OR ENGINEERS FOR THE PROJECT. FOR ANY DETAILS BEYOND THE SCOPE AS ABOVE, PLEASE CONTACT HILTI ENGINEERING SERVICE FOR ADVICES.

Hilti Firestop Systems	Hilti (Hong Kong) Ltd. Technical Advisory Services Hotline : 8228-8118	Sheet 1 OF 1 Scale NOT TO SCALE Date FEB 2023	Drawing No. EM-MOP01-R

Saving Lives through Innovation and Education

Copy Right Reserved By Hilti Corporation

MULTIPLE PENETRATION APPLICATION DETAIL (2 OF 2)

BS 476-20

FIRE RESISTANCE RATING: UP TO -/288/69
PRODUCT USED: CFS-COS FIRESTOP COMPOSITE SHEET
REFERENCE: R18G14-1A

SIDE VIEW / TOP VIEW

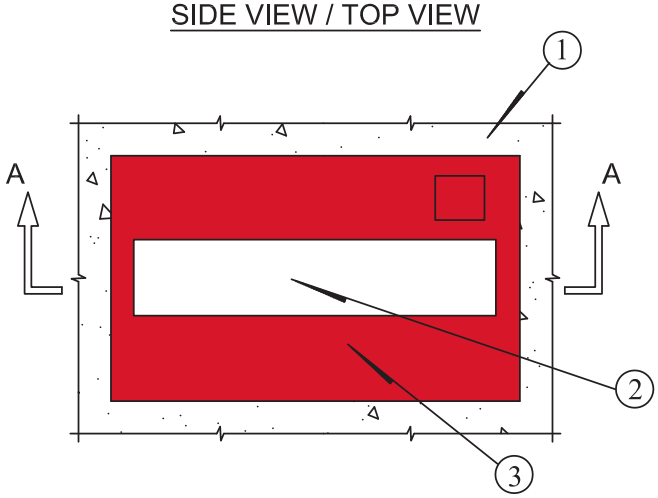

SECTION A-A
(FLOOR) FRR -/209/-

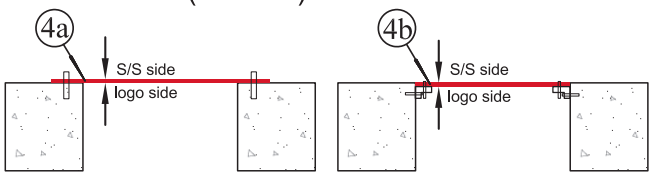

SECTION A-A
(FLOOR) FRR -/288/69

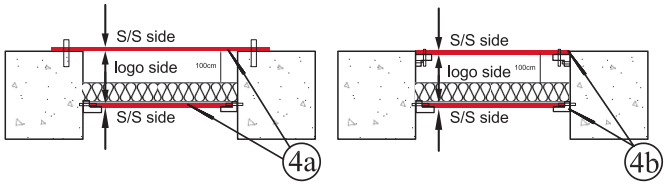

1. CONCRETE FLOOR OR WALL ASSEMBLY (240/240/240 F.R.R.):
   A. CONCRETE WALL OR FIRE-RATED BLOCKWALL (MIN. 100mm THICKNESS).
   B. CONCRETE FLOOR (MIN. 150mm THICKNESS).
2. PENETRATING ITEM(S) TO BE PIPE AND CABLE PENTRATION ENCLOSED IN A METRAL SLEEVE OR STEEL TRUNKING
3. **CFS-COS FIRESTOP COMPOSITE SHEET** TO BE INSTALLED WITH EITHER METHOD 4a or 4b (SEE APPLICATION DETAILS)

Application Details:

	Layer(s) of CFS-COS	Layer(s) of Mineral Wool	FRR
Floor Case	1	n/a	-/209/-
	2	1	-/288/69

ALL CONFIGURATIONS SHOWN MUST BE SUBMITTED AND APPROVED BY THE SPECIFYING ARCHITECTS OR ENGINEERS FOR THE PROJECT. FOR ANY DETAILS BEYOND THE SCOPE AS ABOVE, PLEASE CONTACT HILTI ENGINEERING SERVICE FOR ADVICES.

Hilti Firestop Systems

Hilti (Hong Kong) Ltd.
Technical Advisory Services Hotline : 8228-8118

Sheet 1 OF 1
Scale NOT TO SCALE
Date FEB 2023

Drawing No. EM-MOP02-R

Saving Lives through Innovation and Education

Copy Right Reserved By Hilti Corporation

DRYWALL JOINT APPLICATION DETAIL

FIRE RESISTANCE RATING: UP TO -/136/136
PRODUCT USED: CP 606 FIRESTOP ACRYLIC SEALANT
REFERENCE: RED R22D26-1A

BS 476-20
EN1366-4

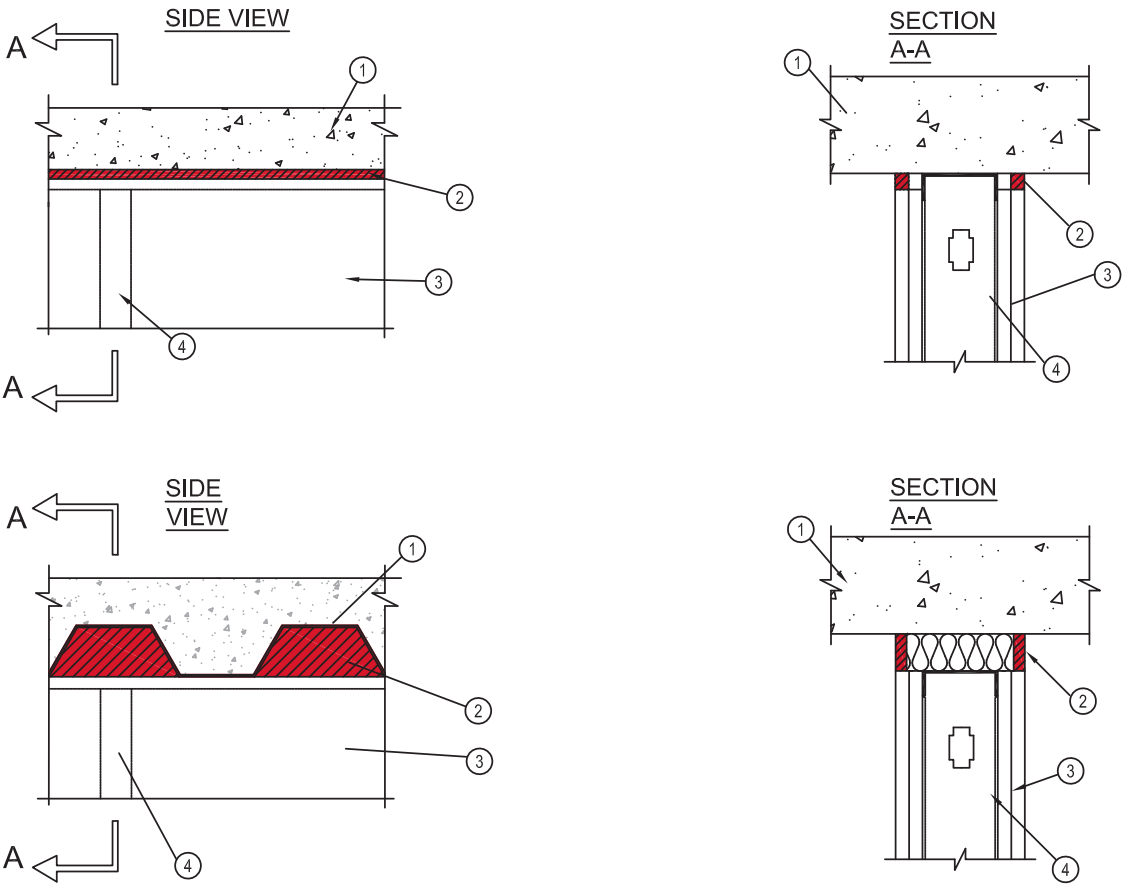

1. CONCRETE FLOOR ASSEMBLY (120/120/120 F.R.R.)
2. MINIMUM 10mm DEPTH **CP 606 FIRESTOP ACRYLIC SEALANT**, WITH 100 kg/m^3 DENSITY MINERAL WOOL AS BACKING MATERIAL.
3. GYPSUM BOARD WALL OF DRYWALL ASSEMBLY (-/120/120 F.R.R.)
4. CEILING RUNNER AND STEEL STUDS FASTENED TO UNDERSIDE OF CONCRETE FLOOR.

NOTES :
1. MAXIMUM WIDTH OF JOINT (COMPOSITE SLAB CASE) = 65mm.
2. FIRE-RATING OF THE SYSTEM IS ONLY AS GOOD AS PERFORMANCE OF DRYWALL ASSEMBLY UNDER FIRE CONDITIONS.

ALL CONFIGURATIONS SHOWN MUST BE SUBMITTED AND APPROVED BY THE SPECIFYING ARCHITECTS OR ENGINEERS FOR THE PROJECT. FOR ANY DETAILS BEYOND THE SCOPE AS ABOVE, PLEASE CONTACT HILTI ENGINEERING SERVICE FOR ADVICES.

Hilti Firestop Systems

Hilti (Hong Kong) Ltd.
Technical Advisory Services Hotline :
8228-8118

Sheet 1 OF 1
Scale NOT TO SCALE
Date FEB 2023

Drawing No.
AI-TPW01

Saving Lives through Innovation and Education

Copy Right Reserved By Hilti Corporation

TIMBER / STEEL DOOR FRAME DETAIL

FIRE RESISTANCE RATING: UP TO -/240/120
PRODUCT USED: CP 606 FIRESTOP ACRYLIC SEALANT
REFERENCE: RED R22H09-1A

BS 476-22
EN 1634-1

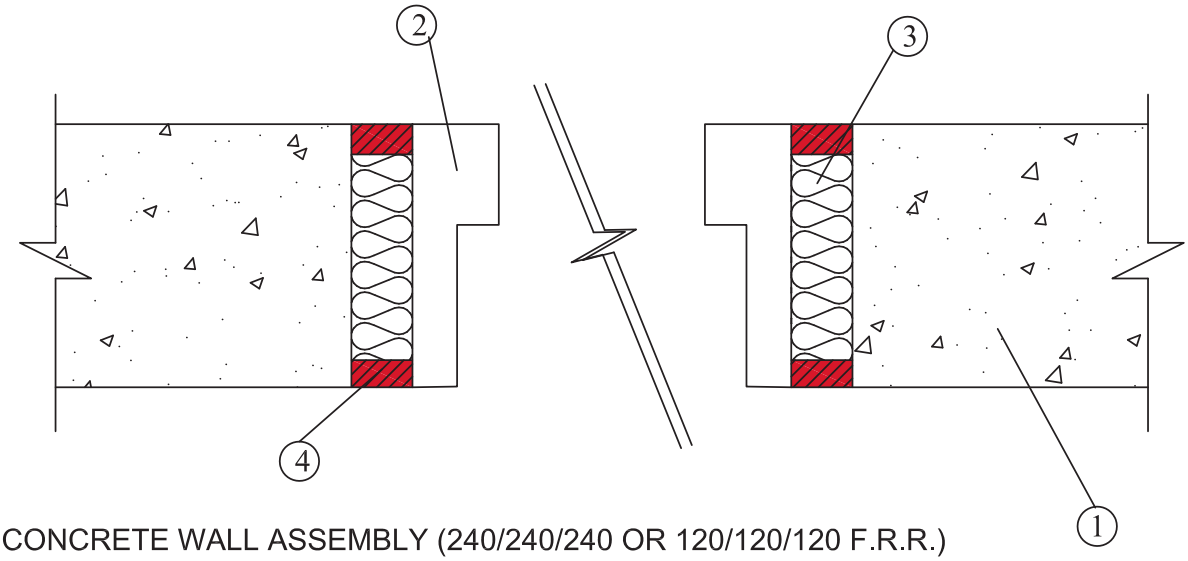

1. CONCRETE WALL ASSEMBLY (240/240/240 OR 120/120/120 F.R.R.)
2. TIMBER / STEEL DOOR FRAME (SEE NOTES 2).
3. BACKING MATERIAL INSIDE THE JOINT CAN EITHER BE:
   A) POLYETHYLENE (PE) BACKING ROD FIT THROUGH THE WIDTH OF THE JOINT
   B) MINERAL WOOL (MIN 140kg/m^3 DENSITY & 65mm)
   C) **CF-F 750 FILLING FOAM**
4. MIN. 15mm DEPTH **CP 606 FIRESTOP ACRYLIC SEALANT**, FLUSH WITH BOTH SIDES OF THE WALL SURFACE.

NOTES:
1. MAXIMUM JOINT WIDTH = 30mm.
2. FIRE PERFORMANCE OF THE DOOR AND DOOR FRAME TO BE CONSIDERED SEPARATELY BY CONTRACTOR.

ALL CONFIGURATIONS SHOWN MUST BE SUBMITTED AND APPROVED BY THE SPECIFYING ARCHITECTS OR ENGINEERS FOR THE PROJECT. FOR ANY DETAILS BEYOND THE SCOPE AS ABOVE, PLEASE CONTACT HILTI ENGINEERING SERVICE FOR ADVICES.

Hilti Firestop Systems	Hilti (Hong Kong) Ltd. Technical Advisory Services Hotline : 8228-8118	Sheet 1 OF 1 Scale NOT TO SCALE Date FEB 2023	Drawing No. AI-TDF01-R

Saving Lives through Innovation and Education

Copy Right Reserved By Hilti Corporation

INSULATED COPPER PIPE PENETRATION DETAIL (2 OF 5)

BS 476-20
EN 1366-3

FIRE RESISTANCE RATING: UP TO -/120/120
PRODUCT USED: CFS-B FIRESTOP BANDAGE
CP 606 FIRESTOP ACRYLIC SEALANT
CFS-F FX FIRESTOP FOAM
REFERENCE: RED_R16L28-1A, RED_R17E27-1A
RED_R17C22-1A
ETA-20/0993

SIDE VIEW

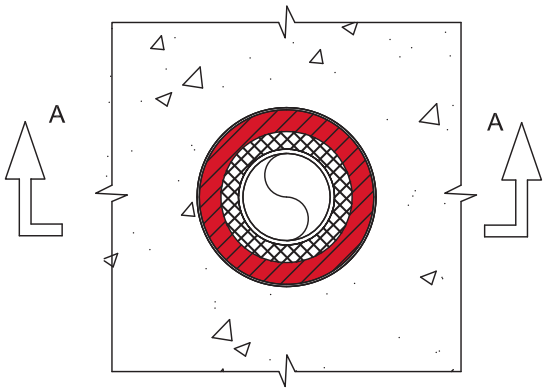

SECTION A-A

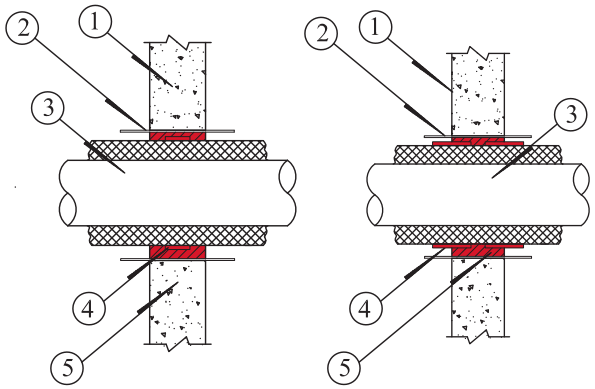

1. CONCRETE FLOOR OR WALL ASSEMBLY:
   A. CONCRETE WALL OR BLOCK WALL.
   B. CONCRETE FLOOR.
2. OPTIONAL : METAL SLEEVE (CIRCULAR / RECTANGULAR)
3. PENETRATING ITEM:
   COPPER PIPE WITH ELASTOMERIC / MINERAL WOOL INSULATION (SEE NOTE 1)
4. **CFS-B FIRESTOP BANDAGE** WRAPPED AROUND THE OUTER CIRCUMFERNCE OF THE INSULATION (SEE APPLICATION DETAILS)
5. FOR ANNULAR SPACE ≤ 30mm, FULL THE VOID UP BY MINERAL WOOL WITH **CP 606 FIRESTOP ACRYLIC SEALANT** ON BOTH SIDES OF THE FLOOR/WALL ASSEMBLY. OTHERWISE, VOIDS TO BE FILLED BY **CFS-F FX FIRESTOP FOAM**. (SEE NOTES 2)

Application Details

Wall case, FRR

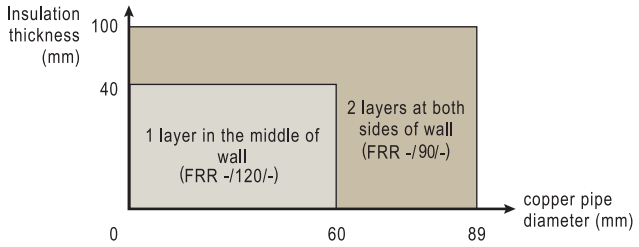

Floor case, FRR -/120/-

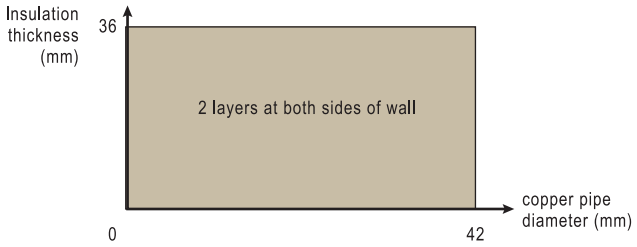

NOTES :
1. PRACTICAL EXAMPLE FOR ELASTOMERIC INSULATION IS ARMAFLEX INSULATION OR EQUIVALENT.
2. FOR THE PURPOSE OF SMOKE-SEAL AND SURFACE FINSIH. NOMINAL THICKNESS OF 15mm DEPTH **CP 606 FIRESTOP ACRYLIC SEALANT** OR 100mm DEPTH **CFS-F FX FIRESTOP FOAM** SHOULD BE APPLIED.

ALL CONFIGURATIONS SHOWN MUST BE SUBMITTED AND APPROVED BY THE SPECIFYING ARCHITECTS OR ENGINEERS FOR THE PROJECT. FOR ANY DETAILS BEYOND THE SCOPE AS ABOVE, PLEASE CONTACT HILTI ENGINEERING SERVICE FOR ADVICES.

Hilti Firestop Systems	Hilti (Hong Kong) Ltd. Technical Advisory Services Hotline : 8228-8118	Sheet 2 OF 5 Scale NOT TO SCALE Date MAR 2023	Drawing No. EM-INP02

Saving Lives through Innovation and Education

Copy Right Reserved By Hilti Corporation

CHILLED WATER/HOT WATER PIPE PENETRATION DETAIL(3 OF 5)

BS 476-20
EN 1366-3

FIRE RESISTANCE RATING: UP TO -/120/120
PRODUCT USED: CFS-B FIRESTOP BANDAGE
CP 606 FIRESTOP ACRYLIC SEALANT
REFERENCE: RED_R16L28-1A, RED R15K33-1A
ETA-20/0993

FLOOR CASE

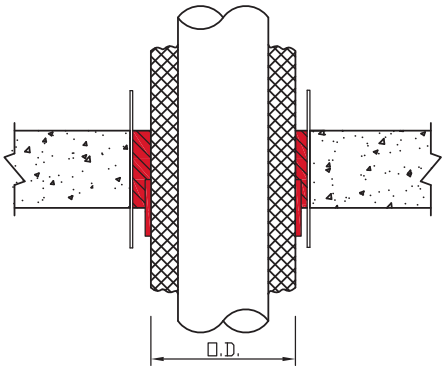

WALL CASE

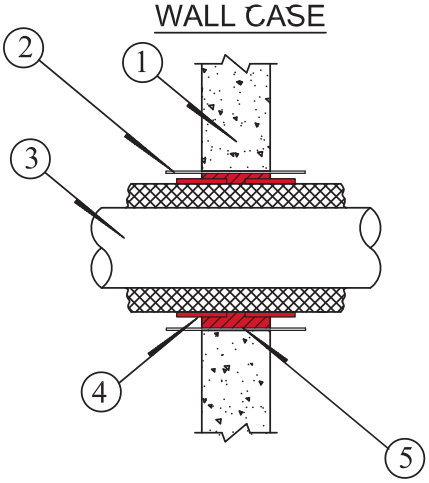

1. CONCRETE FLOOR OR WALL ASSEMBLY:
   A. CONCRETE WALL OR BLOCK WALL.
   B. CONCRETE FLOOR.
2. OPTIONAL : METAL SLEEVE (CIRCULAR / RECTANGULAR)
3. PENETRATING ITEM:
   G.I. PIPE WITH ELASTOMERIC / PHENOLIC INSULATION (SEE NOTE 1)
4. **CFS-B FIRESTOP BANDAGE** WRAPPED AROUND THE OUTER CIRCUMFERNCE OF THE INSULATION (SEE APPLICATION DETAILS)
5. FOR ANNULAR SPACE ≤ 30mm, FULL THE VOID UP BY MINERAL WOOL WITH **CP 606 FIRESTOP ACRYLIC SEALANT** ON BOTH SIDES OF THE FLOOR/WALL ASSEMBLY. OTHERWISE, VOIDS TO BE FILLED BY CEMENT MORTAR. (SEE NOTES 2)

Application Details

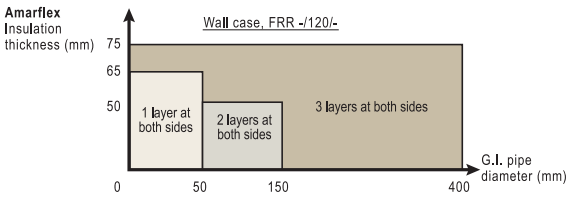

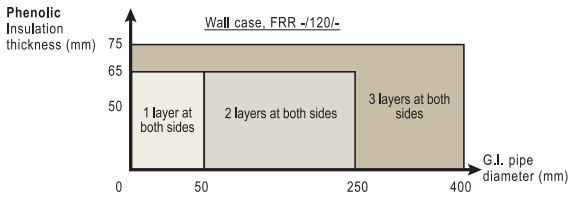

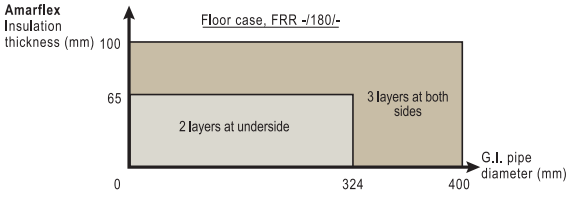

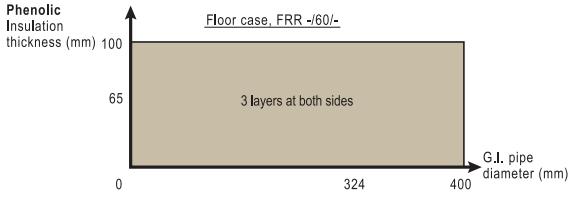

NOTES :
1. PRACTICAL EXAMPLE FOR ELASTOMERIC INSULATION IS ARMAFLEX INSULATION, PHENOLIC INSULATION OR EQUIVALENT.
2. FOR THE PURPOSE OF SMOKE-SEAL AND SURFACE FINISH, NOMINAL THICKNESS OF 5~10mm **CP 606 FIRESTOP ACRYLIC SEALANT** SHOULD BE APPLIED.

ALL CONFIGURATIONS SHOWN MUST BE SUBMITTED AND APPROVED BY THE SPECIFYING ARCHITECTS OR ENGINEERS FOR THE PROJECT. FOR ANY DETAILS BEYOND THE SCOPE AS ABOVE, PLEASE CONTACT HILTI ENGINEERING SERVICE FOR ADVICES.

Hilti Firestop Systems	Hilti (Hong Kong) Ltd. Technical Advisory Services Hotline : 8228-8118	Sheet 3 OF 5 Scale NOT TO SCALE Date MAR 2023	Drawing No. EM-INP03

Saving Lives through Innovation and Education

Copy Right Reserved By Hilti Corporation

WALL TIE HOLE APPLICATION DETAIL (1 OF 3)

FIRE RESISTANCE RATING: UP TO -/120/120
PRODUCT USED: CF 125-50 FOAM
REFERENCE: RED R23B17-1A

BS 476-20

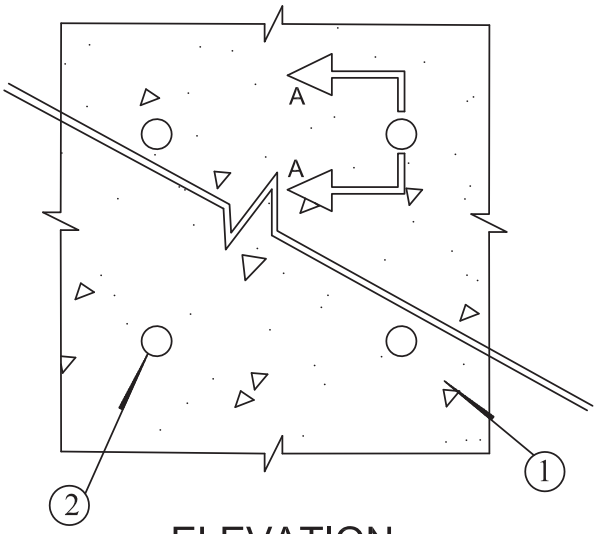

ELEVATION

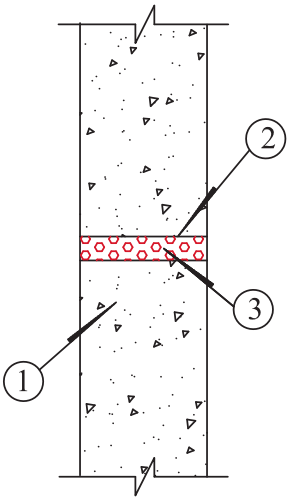

SECTION A-A

1. CONCRETE WALL ASSEMBLY (-/120/- F.R.R). SEE NOTES 3 BELOW.
2. WALL TIE HOLE.
3. MINIMUM 100mm DEPTH **CF 125-50 FOAM** FULLY FILLED ACROSS THE WALL TIE HOLE.

NOTES :
1. MAXIMUM DIAMETER OF WALL TIE HOLE = 25mm.
2. PLASTIC TUBE INSIDE THE WALL TIE HOLE SHOULD BE REMOVED PRIOR TO THE APPLICATION OF FOAM.
3. FOR 120/120/120 F.R.R. MINIMUM WALL THICKNESS ACCORDING TO "CODE OF PRACTICE FOR FIRE RESISTING CONSTRUCTION 1996" (TABLE A):
- WITH NOT LESS THAN 1% VERTICAL REINFORCEMENT: 100mm
- WITH LESS THAN 1% VERTICAL REINFORCEMENT: 160mm

ALL CONFIGURATIONS SHOWN MUST BE SUBMITTED AND APPROVED BY THE SPECIFYING ARCHITECTS OR ENGINEERS FOR THE PROJECT. FOR ANY DETAILS BEYOND THE SCOPE AS ABOVE, PLEASE CONTACT HILTI ENGINEERING SERVICE FOR ADVICES.

Hilti Firestop Systems

Hilti (Hong Kong) Ltd.
Technical Advisory Services Hotline :
8228-8118

Sheet 1 OF 3
Scale NOT TO SCALE
Date APR 2023

Drawing No.
AI-WTH01

Saving Lives through Innovation and Education

Copy Right Reserved By Hilti Corporation

WALL TIE HOLE APPLICATION DETAIL (2 OF 3)

FIRE RESISTANCE RATING: UP TO -/240/120
PRODUCT USED: CP 606 FIRESTOP ACRYLIC SEALANT, CF 125-50 FOAM
REFERENCE: RED R23B17-1A

BS 476-20

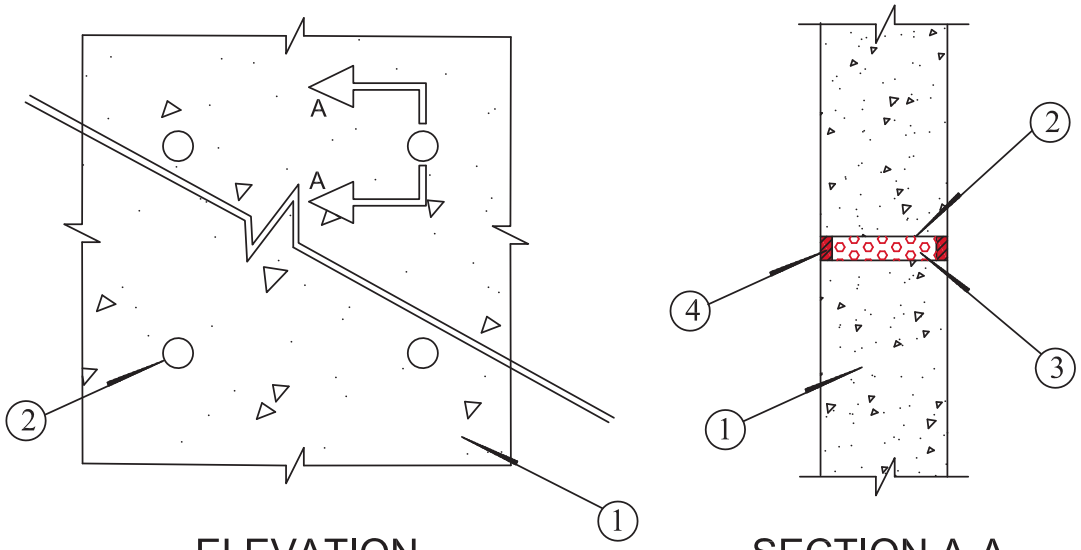

ELEVATION SECTION A-A

1. CONCRETE WALL ASSEMBLY (MIN. 200mm THICKNESS) (240/240/204 F.R.R). SEE NOTES 4 BELOW
2. WALL TIE HOLE.
3. CF 125-50 FOAM FULLY FILLED ACROSS THE WALL TIE HOLE.
4. MINIMUM 15mm DEPTH **CP 606 FIRESTOP ACRYLIC SEALANT**, FLUSH WITH THE CONRETE WALL SURFACE.

NOTES:
1. MAXIMUM DIAMETER OF WALL TIE HOLE = 20mm.
2. MINIMUM 15mm DEPTH CP 606 FIRESTOP ACRYLIC SEALANT IS REQUIRED ON BOTH SIDES OF THE WALL TIE HOLE.
3. PLASTIC TUBE INSIDE THE WALL TIE HOLE SHOULD BE REMOVED PRIOR TO THE APPLICATION OF FOAM.
4. FOR -/240/- F.R.R MINIMUM WALL THICKNESS ACCORDING TO "CODE OF PRACTICE FOR FIRE RESISTING CONSTRUCTION 1996" (TABLE A):
   - WITH NOT LESS THAN 1% VERTICAL REINFORCEMENT: 180mm
   - WITH LESS THAN 1% VERTICAL REINFORCEMENT: 240mm

ALL CONFIGURATIONS SHOWN MUST BE SUBMITTED AND APPROVED BY THE SPECIFYING ARCHITECTS OR ENGINEERS FOR THE PROJECT. FOR ANY DETAILS BEYOND THE SCOPE AS ABOVE, PLEASE CONTACT HILTI ENGINEERING SERVICE FOR ADVICES.

Hilti Firestop Systems	Hilti (Hong Kong) Ltd. Technical Advisory Services Hotline : 8228-8118	Sheet 2 OF 3 Scale NOT TO SCALE Date APR 2023	Drawing No. AI-WTH02

Saving Lives through Innovation and Education

Copy Right Reserved By Hilti Corporation

WALL TIE HOLE APPLICATION DETAIL (3 OF 3)

FIRE RESISTANCE RATING : (NON FIRE-RATED)
PRODUCT USED : CF-F 750 FOAM

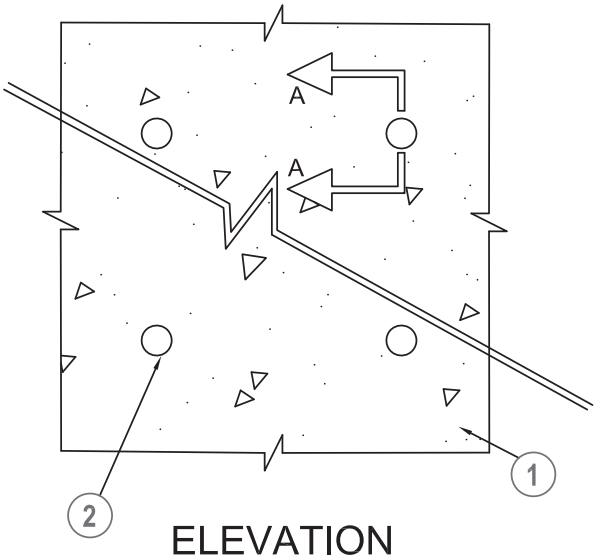

ELEVATION

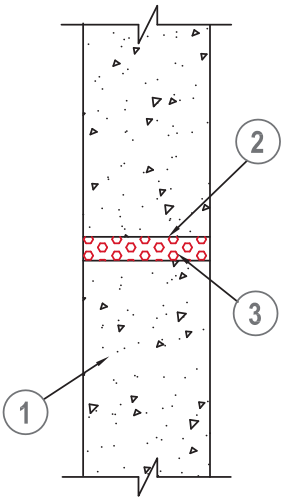

SECTION A-A

1. CONCRETE WALL ASSEMBLY (NOMINAL 100mm THICKNESS)
2. WALL TIE HOLE.
3. 100mm DEPTH **CF-F 750 FOAM** FULLY FILLED ACROSS THE WALL TIE HOLE.

NOTES :
1. NOMINAL DIAMETER OF WALL TIE HOLE = 25 - 30mm.
2. WALL THICKNESS AND DIAMETER OF WALL TIE HOLE VARIES DEPENDS ON PROJECT.
3. THIS IS A NON FIRE-RATED DETAIL. FOR FIRE-RATED WALL TIE HOLE SEALING, PLEASE REFER TO AI-WTH01 & AI-WTH02 PLASTIC TUBE INSIDE THE WALL TIE HOLE SHOULD BE REMOVED PRIOR TO THE APPLICATION OF FOAM.

ALL CONFIGURATIONS SHOWN MUST BE SUBMITTED AND APPROVED BY THE SPECIFYING ARCHITECTS OR ENGINEERS FOR THE PROJECT. FOR ANY DETAILS BEYOND THE SCOPE AS ABOVE, PLEASE CONTACT HILTI ENGINEERING SERVICE FOR ADVICES.

Hilti Firestop Systems	Hilti (Hong Kong) Ltd. Technical Advisory Services Hotline : 8228-8118	Sheet 3 OF 3 Scale NOT TO SCALE Date JULY, 2018	Drawing No. AI-WTH03

Saving Lives through Innovation and Education

Copy Right Reserved By Hilti Corporation

PRODUCT INFORMATION

Leading-edge Technology.
Outstanding Service.



Firestop acrylic sealant CP 606





APPLICATIONS

- Sealing rigid or low-movement ceiling/wall joints, widths from 6 to 30 mm
- Sealing metal pipe penetrations
- For use in various base materials such as masonry, concrete, drywall and metal

ADVANTAGES

- Paintable
- Easy to clean up with water
- Smoke, fume and water resistant


Smoke


Water Tight


Acoustic


Siesmic




Mould & Mildew

Technical data	
Chemical basis	Water-based acrylic dispersion
Base materials	Concrete, Masonry, Drywall, Steel
Movement[1]	±12.5% (ISO 11600)
Approx. tack-free time (ventilated at 77°F, 80% rel. humidity)	20 min
Approx. curing time[2]	3 mm/3 days
Average volume shrinkage	22.2%
Application temperature range	5 - 40 °C
Temperature resistance range	-30 - 80 °C
Storage and transportation temperature range	5 - 25 °C
Shelf life[3]	24 Months

[1] according to HTC 1250
[2] at 75°F/24°C, 50% relative humidity
[3] at 77°F/25°C and 50% relative humidity; from date of manufacture



Consumption Guide

Cartridge volume = 310 ml (CP 606)
a = Joint width in mm
b = Sealant depth in mm

$$\text{Linear metre per cartridge} = \frac{\text{Cartridge volume in ml}}{a \times b}$$

e.g.a floor 20 mm wide with product depth of 10 mm; with 310 ml cartridge:
Therefore linear metres per cartridge = 310/(20 x 10) = 1.55 metre per cartridge for one side of the floor

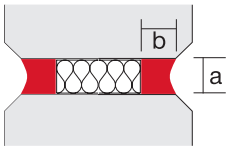

Wall

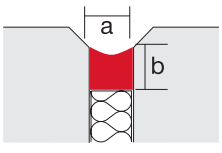

Floor

Joint width (mm)	0-15	16-20	21-30
Sealant depth (mm)	6	10	15

Application Procedure

Joint installation

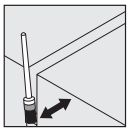
1. Clean opening

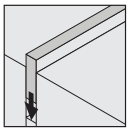
2. Insert backing material

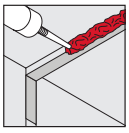
3. Apply CP 606

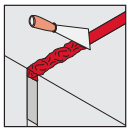
4. Smooth CP 606

Pipe installation (non-combustible pipes only)

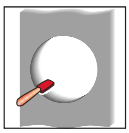
1. Clean opening


2. Insert backing material

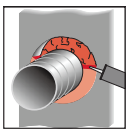
3. Apply CP 606


4. Smooth CP 606

Order Now

Ordering designation	Colour	Volume per unit	Packaging	Sales pack quantity	Item number
CP 606 310ml INT grey	Grey	310 ml	Cartridge	1 pc	**209630**
CP 606 580ml INT grey	Grey	580 ml	Foil pack	1 pc	**209633**
CP 606 310ml white	White	310 ml	Cartridge	1 pc	**209625**
CP 606 580ml white	White	580 ml	Foil pack	1 pc	**209632**

Please visit Hilti website for the latest item numbers and related products

Copy Right Reserved By Hilti Corporation

Firestop silicone sealant CP 601S



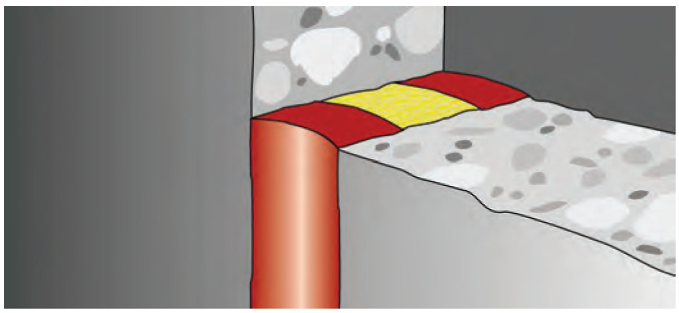

APPLICATIONS

- Expansion or stretched connection joints in fire compartment walls and floors
- Uninsulated metal pipes in penetrations through fire compartment walls and floors
- Acoustic insulation of pipes
- Suitable for outdoor use
- For use on concrete and masonry (indoors/outdoors)

ADVANTAGES

- Weather and UV-resistant
- Excellent movement capability
- Smoke, gas and water-resistant

Technical data	
Chemical basis	Neutral elastic silicone
Base materials	Masonry, Metal, Concrete, Glass
Movement[1)]	± 25% (ISO 11600)
Approx. tack-free time (ventilated at 77°F, 80% rel. humidity)	15 min
Approx. curing time[2)]	2 mm/3 days
Average volume shrinkage	5 %
Application temperature range	5 - 40 °C
Temperature resistance range	-40 - 160 °C
Storage and transportation temperature range	5 - 25 °C
Shelf life[3)]	12 Months

[1)] according to HTC 1250
[2)] at 75°F/24°C, 50% relative humidity
[3)] at 77°F/25°C and 50% relative humidity; from date of manufacture





Consumption Guide

Cartridge volume = 310 ml (CP 601S)
a = Joint width in mm
b = Sealant depth in mm

$$\text{Linear metre per cartridge} = \frac{\text{Cartridge volume in ml}}{a \times b}$$

e.g.a floor 50 mm wide with product depth of 15 mm; with 310 ml cartridge:
Therefore linear metres per cartridge = 310/(50 x 15) = 0.41 metre per cartridge for one side of the floor

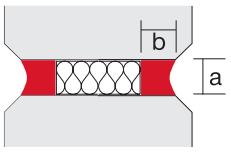

Wall

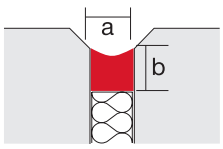

Floor

Joint width (mm)	0-15	16-100
Sealant depth (mm)	6	15

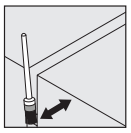
1. Clean opening

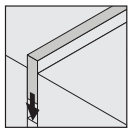
2. Insert backing material

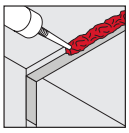
3. Apply CP 601S

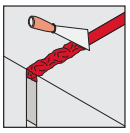
4. Smooth CP 601S


1. Clean opening


2. Insert backing material

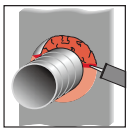
3. Apply CP 601S


4. Smooth CP 601S

Order Now

Ordering designation	Colour	Volume per unit	Packaging	Sales pack quantity	Item number
CP 601S 310ML grey	Grey	310 ml	Cartridge	1 pc	**310635**
CP 601S 600ML grey	Grey	600 ml	Foil pack	1 pc	**312111**[1)]
CP 601S 310ML white	White	310 ml	Cartridge	1 pc	**310633**
CP 601S 600ML white	White	600 ml	Foil pack	1 pc	**310637**[1)]

[1)] This is a non-stock item. For detailed lead time information please contact your Hilti representative.

Please visit Hilti website for the latest item numbers and related products

Copy Right Reserved By Hilti Corporation

High performance intumescent firestop sealant FS-ONE MAX

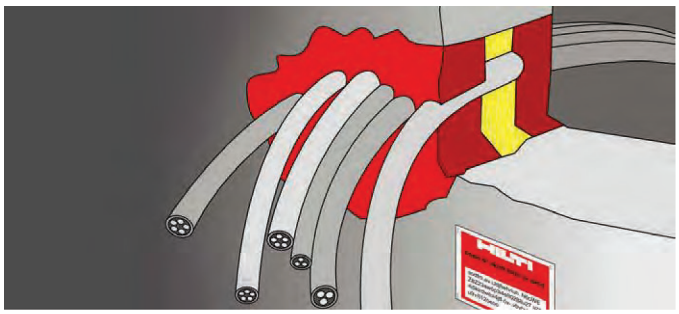



APPLICATIONS

- For effectively sealing most common through penetrations in a variety of base materials
- Copper and EMT pipes
- Insulated steel and copper pipes
- Single cables and cable bundles
- Closed or vented plastic pipes
- HVAC penetrations

ADVANTAGES

- One product for most firestop applications
- Cost-effective solution
- Easy to work with and fast cleanup

Technical data	
Chemical basis	Water-based acrylic dispersion
Base materials	Concrete, Concrete block, Metal, Wood, Gypsum
Expansion ratio (unrestricted, up to)	1:5
Approx. curing time[1)]	4 mm/3 days
Average volume shrinkage	19.4 %
Application temperature range	5 - 40 °C
Temperature resistance range	-20 - 100 °C
Storage and transportation temperature range	5 - 25 °C
Shelf life[3)]	18 Months

[1)] at 75°F/24°C, 50% relative humidity
[2)] at 77°F/25°C and 50% relative humidity; from date of manufacture

Smoke | Water Tight | Acoustic | Siesmic

Low VOC | Mould & Mildew



Consumption Guide

Cartridge size = 310 ml (FS-ONE)

Sealing volume in wall application (installation on both sides)

$$Vs = \frac{\pi}{4} \times (a^2 - c^2) \times 2b$$

Sealing volume in floor application (installation on one side only)

$$Vs = \frac{\pi}{4} \times (a^2 - c^2) \times b$$

a = hole diameter in cm
b = installation depth in cm (see approvals)
c = outside diameter of pipe or bunched cable diameter in cm

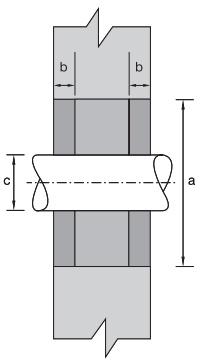

No. of cartridges needed,

$$n = \frac{Vs}{\text{cartridge volume in ml}}$$

Application Procedure

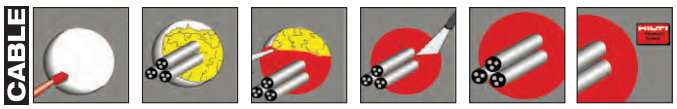

1. Clean opening
2. Pack Mineral wool. (If required)
3. Apply FS-ONE MAX.
4. Smooth FS-ONE MAX.
5. Leave completed seal undisturbed for 48 hours.
6. Fasten identification plate. (If required)

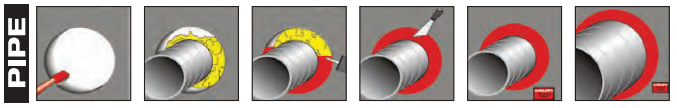

1. Clean opening
2. Pack Mineral wool. (If required)
3. Apply FS-ONE MAX.
4. Smooth FS-ONE MAX.
5. Leave completed seal undisturbed for 48 hours.
6. Fasten identification plate. (If required)

Order Now

Ordering designation	Colour	Volume per unit	Packaging	Sales pack quantity	Item number
FS-ONE MAX 10.1OZ CART	Red	300 ml	Cartridge	1 pc	**2101534**

Please visit Hilti website for the latest item numbers and related products

Copy Right Reserved By Hilti Corporation

Firestop intumescent sealant CP 611A

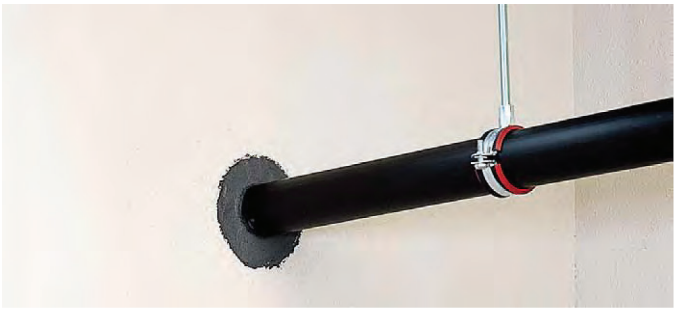

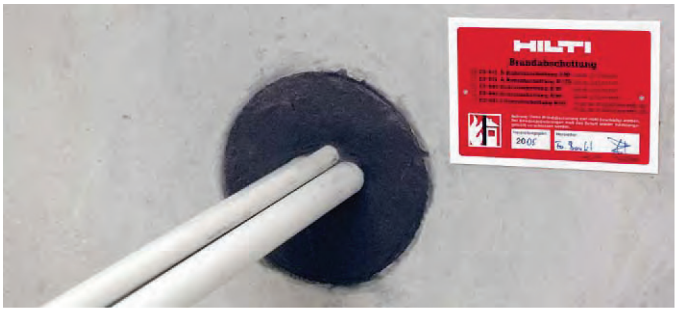

APPLICATIONS

- Single cables and cable bundles
- Plastic pipes up to 50 mm (2") diameter without additional collar
- Sealing penetrations previously sealed with firestop mortar, after installing additional cables
- Small openings

ADVANTAGES

- Paintable
- Fast, easy application and cleaning up
- Particularly suitable for laying new cables
- Silicone-free
- Easy to clean with water

Smoke | Water Tight | Acoustic | Siesmic

Low VOC | Mould & Mildew

Consumption Guide

Cartridge size = 310 ml (CP 611A)

Sealing volume in wall application (installation on both sides)

$$Vs = \frac{\pi}{4} \times (a^2 - c^2) \times 2b$$

Sealing volume in floor application (installation on one side only)

$$Vs = \frac{\pi}{4} \times (a^2 - c^2) \times b$$

a = hole diameter in cm
b = installation depth in cm (see approvals)
c = outside diameter of pipe or bunched cable diameter in cm

No. of cartridges needed,

$$n = \frac{Vs}{310\ (ml)}$$

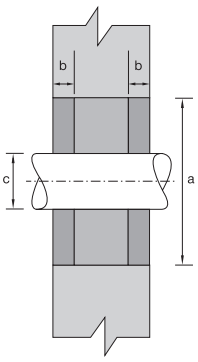

Technical data	
Chemical basis	Water-based acrylic dispersion
Base materials	Concrete, Concrete block, Metal, Wood, Gypsum
Movement[1)]	No
Expansion ratio (unrestricted, up to)	1:10
Approx. tack-free time (ventilated at 77°F, 80% rel. humidity)	15 min
Approx. curing time[2)]	3 mm/3 days
Application temperature range	5 - 40 °C
Temperature resistance range	-40 - 100 °C
Storage and transportation temperature range	5 - 25 °C
Shelf life[3)]	12 Months

[1)] according to HTC 1250
[2)] at 75°F/24°C, 50% relative humidity
[3)] at 77°F/25°C and 50% relative humidity; from date of manufacture



Application Procedure

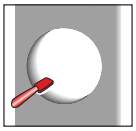

1. Clean opening

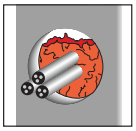

2. Depending on required integrity, pack in mineral wool or foam

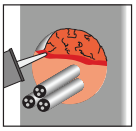

3. Apply CP 611A



4. Smooth CP 611A

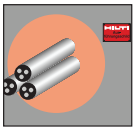

5. Fasten installation plate in place (if required)

Order Now

Ordering designation	Colour	Volume per unit	Packaging	Sales pack quantity	Item number
CP 611A INT	Anthracite	310 ml	Cartridge	1 pc	**220351**

Please visit Hilti website for the latest item numbers and related products

Copy Right Reserved By Hilti Corporation

Firestop joint spray CFS-SP WB





APPLICATIONS

- Sealing openings between the top of walls and concrete or metal floors / ceilings
- Sealing building perimeter gaps between floor slabs or vertical wall and exterior curtain wall facades

ADVANTAGES

- Water-based, low VOC, contains no halogens
- High degree of elasticity - movement capability of up to 50%
- Excellent sprayability and low slump characteristics
- Fast, efficient sealing of wide, difficult-to-access joints

Smoke | Water Tight | Acoustic | Siesmic

Low VOC | Mould & Mildew

Technical data	
Chemical basis	Water-based acrylic dispersion
Base materials	Concrete, Masonry, Gypsum, Steel, Aluminium, Glass
Movement[1]	Up to 50 %
Approx. tack-free time (ventilated at 77°F, 80% rel. humidity)	180 min
Approx. curing time[2]	3 mm/day
Average volume shrinkage	0.511
Application temperature range	4 - 40 °C
Temperature resistance range	-40 - 80 °C
Storage and transportation temperature range	4 - 25 °C
Shelf life[3]	12 Months

[1] according to HTC 1250

[2] at 75°F/24°C, 50% relative humidity

[3] at 77°F/25°C and 50% relative humidity; from date of manufacture

Consumption Guide (based on 3mm wet thickness)

Joint width (mm)	With overlap 15 mm either side (mm)	Meters per 19 litres pail (meters)
25	55	110
50	80	75
100	130	45
150	180	35
200	230	25

Application Procedure

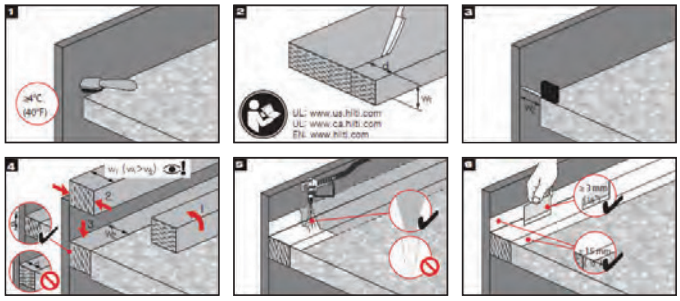



Order Now | Watch Video

Ordering designation	Colour	Volume per unit	Packaging	Sales pack quantity	Item number
CFS-SP WB red	Red	19000 ml	Bucket	1 pc	**430815**

Please visit Hilti website for the latest item numbers and related products

Copy Right Reserved By Hilti Corporation

Firestop putty pad CP 617



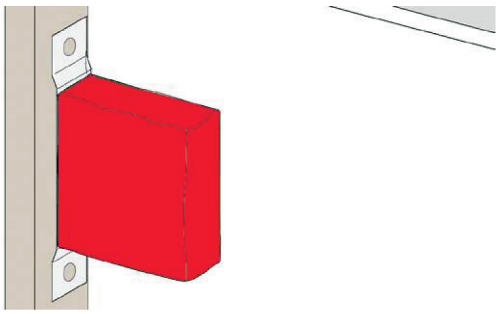

APPLICATIONS

- Can be used for commercial and residential applications
- Accoustically rated drywall - sound transmission classification 59 according to ASTM E90-97 (based on specific construction)
- General gypsum wall assemblies with wood or metal studs
- Socket Box, lift call button, lift indicator panel

ADVANTAGES

- Excellent adhesion to gypsum, metal and plastic
- No oil migration, putty remains flexible over time
- Pad can be moulded by hand without leaving residue on the hands
- Quick and simple to install
- Not electrically conductive

Technical data	
Colour	Red
Electrical resistance data	Non-conductive
Acoustic insulation	Yes
Intumescent	Yes
Application temperature range	0 - 40 °C
Temperature resistance range	-20 - 60 °C
Storage and transportation	-5 - 40 °C
Acoustic index (Tested to DIN EN20140)	64 dB

Acoustic Low VOC Mould & Mildew



Application Procedure


1. Remove label from one side of CP 617

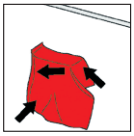
2. Adhere CP 617 to application

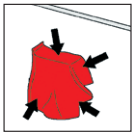
3. Reshape CP 617 fit around box

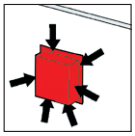
4. Press CP 617 to all sides of application

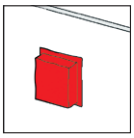
5. Remove other side of label

Order Now Watch Video

Ordering designation	Package contents	Sales pack quantity	Item number
CP 617 6"x7"	1x Firestop putty pad CP 617 6"x7"	20 pc	**309760**
CP 617 XL 9"x9"	1x Firestop putty pad CP XL 617 9"x9"	20 pc	**373387**

Please visit Hilti website for the latest item numbers and related products

Copy Right Reserved By Hilti Corporation

Firestop cable disc CFS-D 1” NEW





APPLICATIONS

- Pre-formed firestopping solution for single cables and small cable bundles in openings up to max. 25 mm
- All cable types currently and commonly used in building practice in Europe (e.g. power, control, signal, telecommunications, emergency and optical fibre cables)
- For use on drywall, masonry and concrete
- Suitable for plastic and metal conduits
- Covers regular and irregular openings (including blank openings)

ADVANTAGES

- Simple – sealant-free installation
- No backfilling material required
- Fast – installed in 10 seconds
- Powerful – broad application range
- Surface-mounted solution
- Minimises waste

Smoke

Mould & Mildew

Acoustic

Low VOC

Technical data	
Colour	Red
Base materials	Concrete, Masonry, Drywall
Application temperature range	0 - 40 °C
Acoustics performance	Test report available
Approx. density	1600 kg/m³
Mold and mildew performance	Class 0 (EN ISO 846)
Intumescent	No
Approvals	ETA-16/0050
Can be painted	No
Electrical resistance data	Non-conductive
European VOC	Available
Packaging	Box



Order Now

Watch Video

Ordering designation	Package contents	Sales pack quantity	Item number
CFS-D 1”	1x Firestop cable disc CFS-D 1”	32 pc	**2116246**

Please visit Hilti website for the latest item numbers and related products

Copy Right Reserved By Hilti Corporation

Firestop foam CP 620

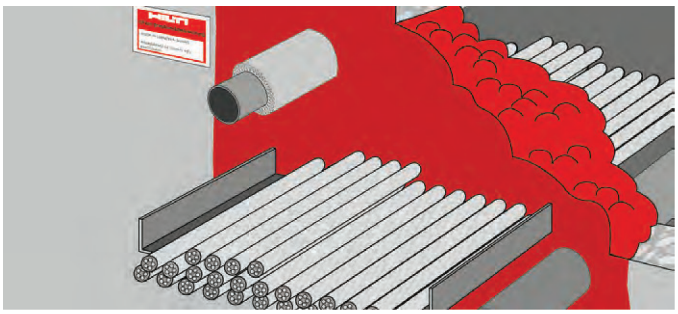

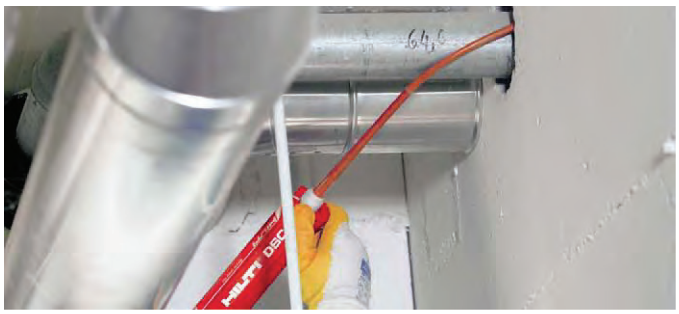

APPLICATIONS

- Concrete, drywall and masonry
- Multiple and mixed penetrations
- Single cables, cable bundles and cable trays
- Metal pipes
- Suitable for irregular and difficult-to-reach openings

ADVANTAGES

- Innovative firestopping solution for complex and difficult-toreach applications
- Virtually impervious to smoke
- Excellent water and vapour resistance
- Single-sided installation possible
- Easy to use in openings where access is poor

Smoke | Water Tight | Acoustic | Siesmic

Low VOC | Mould & Mildew

Technical data	
Chemical basis	Two-component polyurethane foam
Colour	Red
Base materials	Concrete, Masonry, Drywall
Volume per unit	300 ml
Foam yield (up to)	1.9 l
Approx. cut time (at 23°C / 50% rel. humidity)	2 min
Application temperature range	0 - 40 °C
Temperature resistance range	-30 - 100 °C
Storage and transportation temperature range	5 - 25 °C
Shelf life[1)]	9 months

[1)] at 77°F/25°C and 50% relative humidity; from date of manufacture



Consumption Guide

Foam installation thickness: 145
No. of CP 620 cartridges

size of opening (mm x mm)	Cable loading (as % of opening size) 0%	10%	30%	60%
50 x 100	1	1	1	1
100 x 100	1	1	1	1
100 x 150	2	2	1	1
100 x 200	2	2	2	1
100 x 250	3	2	2	1
100 x 300	3	3	2	1
200 x 200	4	3	3	2
200 x 225	4	4	3	2
200 x 250	5	4	3	2
200 x 300	5	5	4	2
200 x 350	6	6	4	3
200 x 400	7	6	5	3
300 x 300	8	7	6	3
300 x 330	8	8	6	4
300 x 400	10	9	7	4
400 x 400	13	12	10	6
400 x 500	17	15	12	7

Application Procedure



1. Hold the cartridge with the nozzle pointing upwards and unscrew the cap. Do not point towards people.

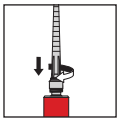

2. Fit the mixer and screw securely.



3. Release the dispenser and pull back the piston rod.



4. Insert the cartridge in the dispenser.



5. Discard the unevenly mixed initial quantity



6. Apply CP 620, building up a seal by working from the back towards the front.



7. Attach the installation plate (if required).

Order Now

Ordering designation	Volume per unit	Package contents	Sales pack quantity	Item number
CP 620	300 ml	1x Firestop foam CP 620 EN/DE/FR/IT/NL/TH	1 pc	**2025085**

Please visit Hilti website for the latest item numbers and related products

Copy Right Reserved By Hilti Corporation

Firestop foam CFS-F FX NEW





APPLICATIONS

- Mechanical: Non-combustible (metal) pipes with mineral wool/ non-flammable insulation, small combustible (plastic) pipes No smoke/gastight additional sealing and no backing material required
- Electrical: Single cables, cable bundles, cable tray and trunking

ADVANTAGES

- 3-phase technology with optimum application characteristics (easily-shapeable foam)
- Easily applied using a Hilti cordless electric dispenser
- Neat and tidy application
- Very quick and easy to install and provides a reliable firestop seal with only one product
- Maintenance and retrofitting of cables is very easy
- Reliable sound insulation properties, due to the flexible foam structure

Smoke Acoustic Siesmic Low VOC Mould & Mildew

Consumption Guide

Wall thickness: 150

Surface area of seal (m^2)	Opening diameter of seal (mm)	Opening size of seal (mm x mm)	Volume (litre), no cable laod
0.01	ø 120	100 x 100	1.50
0.02	ø 160	100 x 200	3.00
0.03	ø 200	100 x 300	4.50
0.04	ø 220	200 x 200	6.00
0.05	ø 250	200 x 250	7.50
0.06	ø 280	200 x 300	9.00
0.07	ø 300	200 x 350	10.50
0.08	ø 320	200 x 400	12.00
0.09	ø 340	300 x 300	13.50
0.1	ø 350	300 x 330	14.85
0.16	--	400 x 400	24.00

No. of CFS-F FX foil packs
Wall thickness: 150

Surface area of seal (m^2)	Cable loading (as % of opening size)			
	0%	10%	30%	60%
0.01	<1	<1	<1	0.5
0.02	<2	<2	1.5	<1
0.03	<3	<2.5	<2	<1.5
0.04	3.5	<3.5	2.5	1.5
0.05	<4.5	<4	3.0	<2
0.06	5.5	<5	<4	<2.5
0.07	6.0	<5.5	<4.5	<2.5
0.08	<7	<6.5	<5	<3
0.09	<8	<7	<5.5	<3.5
0.1	8.5	7.5	6.0	3.5
0.16	<13.5	<12.5	<9.5	<5.5

Technical data	
Chemical basis	Two-component polyurethane foam
Colour	Red
Base materials	Concrete, Masonry, Drywall
Volume per unit	325 ml
Foam yield (up to)	2.1 l
Approx. cut time (at 23°C / 50% rel. humidity)	10 min
Application temperature range	10 - 35 °C
Temperature resistance range	-30 - 60 °C
Storage and transportation temperature range	5 - 25 °C
Shelf life[1)]	9 Months

[1)] at 77°F/25°C and 50% relative humidity; from date of manufacture



Application Procedure



1. Clean the opening to be sealed

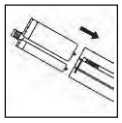

2. Slide the foil pack into the holder



3. Screw the mixing nozzle all the way onto the foil pack and tighten it securely



4. Insert the holder containing the foil pack into the dispenser



5. Discard the unevenly mixed initial quantity



6. Apply the firestop foam in the opening to be sealed



7. Shaped or smoothed by hand (if necessary) after 5mins (approx.) and can be cut after 10mins (approx.)

Order Now Watch Video

Ordering designation	Volume per unit	Package contents	Sales pack quantity	Item number
CFS-F FX	325 ml	1x Firestop foam CFS-F FX -CE	1 pc	**429802**

Please visit Hilti website for the latest item numbers and related products

Copy Right Reserved By Hilti Corporation

Firestop block CFS-BL





APPLICATIONS

- Temporary or permanent sealing around cables, cable bundles and cable trays in wall and floor openings
- Cables, cable bundles and cable trays

ADVANTAGES

- Easy to install, no electric tools required
- Economical installation as the block is pre-cured and ready-to-use
- Painting of cables with firestop coating is not required
- Installation of cables with zero separation to the edge of the penetration is possible
- Best solution for repenetation

Smoke | Acoustic | Siesmic | Low VOC | Mould & Mildew

Technical data	
Chemical basis	PU
Dimensions (LxWxH)	200 x 130 x 50 mm
Expansion temperature (approx.)	200 °C
Expansion ratio (unrestricted, up to)	1:3
Reaction to fire class (EN 13501-1)	E
Application temperature range	5 - 40 °C
Colour	Red
Storage and transportation temperature range	-5 - 40 °C



Consumption Guide

Brick dimension 200 x 130 x 50 mm
a = opening width in cm
b = opening length in cm

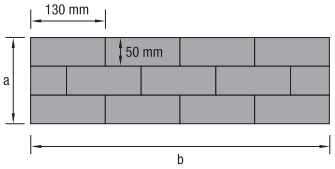

Opening with 30% cross senctional area of services multiply the results by 0.7
Opening with 50% cross senctional area of services, multiply the results by 0.5

Header orientation
Blank opening = $\frac{a \times b}{65}$

e.g. 1 metre by 1 metre opening
Number of bricks required = $\frac{100 \times 100}{65}$ = 154 bricks

Application Procedure



1. Clean opening



2a. Build up blocks



2b. Cut blocks to size for penetration in place



3. Build up blocks

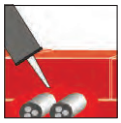

4. Fill gaps with FS-ONE MAX3 / CP 611A

Order Now | Watch Video

Ordering designation	Package contents	Sales pack quantity	Item number
CFS-BL	1x Firestop block CFS-BL	1 pc	**2062863**

Please visit Hilti website for the latest item numbers and related products

Copy Right Reserved By Hilti Corporation

Firestop composite sheet CFS-COS

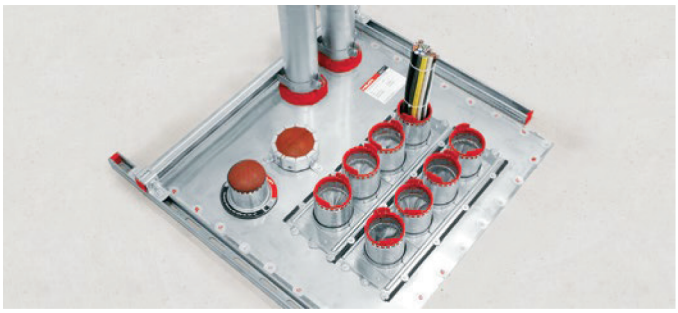



APPLICATIONS

- For use with large wall and floor fire-rated assemblies
- Compatible with Hilti Speed Sleeve and gangplate for floor gang applications
- Intumescent sheet with #304 stainless steel backing for firestopping large openings

ADVANTAGES

- For use with fire-rated assemblies (up to 4 hrs)
- Compatible with Hilti sleeve devices for easy cable management
- Can be fastened using Hilti screw anchor , GX or BX tools – to increase installation efficiency and productivity
- Multi-board systems allow very large openings
- Non-magnetic #304 stainless steel construction ensures good weatherability and no inductive loss in cables
- Fast installation system requires fewer anchors

Technical data	
Application temperature range	-30 to 48°C
Temperature resistance range	-30 to 120°C
Expansion ratio (unrestricted, up to)	1:18
Storage and transportation temperature range	-30 to 48°C
Color	Silver
Dimensions (LxWxH)	910 x 910 x 3.8 mm
Intumescent	Yes

[1] at 77°F/25°C and 50% relative humidity; from date of manufacture



Ordering designation	Package contents	Sales pack quantity	Item number
Firestop Composite Sheet CFS-COS	1x CFS-COS Firestop Composite Sheet	4 pc	**2135884**

Please visit Hilti website for the latest item numbers and related products

Copy Right Reserved By Hilti Corporation

Firestop mortar CP 636

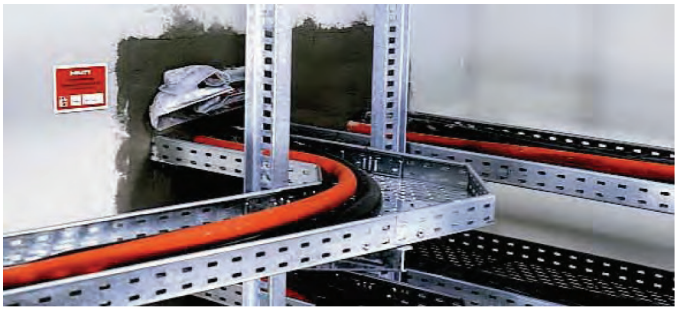



APPLICATIONS

- Permanent firestopping of cables, cable trays, and non-combustible pipes in medium to large wall and floor openings
- Single, multiple and mixed penetrations
- Medium to large multiple penetrations in concrete and masonry in combination with other products
- Lift door frame

ADVANTAGES

- Excellent application characteristics

Technical data	
Base materials	Concrete, Masonry
Approx. mix ratio	3:1 (mortar to water by weight)
Working time (approx.)	45 min
Cured density - min.	700 kg/m³
Max. compressive strength after 28 days	2.9 N/mm²
Application temperature range	5 - 80 °C
Temperature resistance range	-10 - 80 °C
Storage and transportation temperature range	5 - 30 °C
Shelf life[1)]	12 Months
Colour	Grey

[1)] at 77°F/25°C and 50% relative humidity; from date of manufacture

Acoustic Siesmic Low VOC Mould & Mildew

Consumption Guide

20 kg bags yield 22.2 litres
a = opening depth in cm
b = opening length in cm
c = opening width in cm

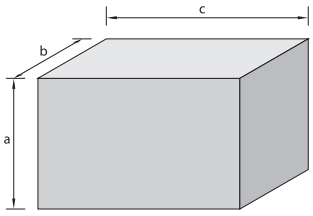

Blank Opening

Number of bags required $= \frac{a \times b \times c}{22{,}000}$

e.g. 100 mm thick floor with 1 metre x 1 metre opening:
Therefore number of bags required = $\frac{10 \times 100 \times 100}{22{,}000}$ = 5 bags



Application Procedure



1. Clean opening, moisten surfaces



2. Mix CP 636 mortar with 3:1 ratio (by adding mortar to water)



3. Put mortar into place



4. Optional: add CP 651 for future cable changes



5. Fasten installation plate in place (if required)

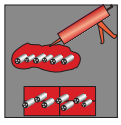

6. Re-installation: lay cables and close remaining opening

Order Now

Ordering designation	Weight	Sales pack quantity	Item number
CP 636 20KG	20 kg	1 pc	**334897**

Please visit Hilti website for the latest item numbers and related products

Copy Right Reserved By Hilti Corporation

Firestop board, coating CP 670

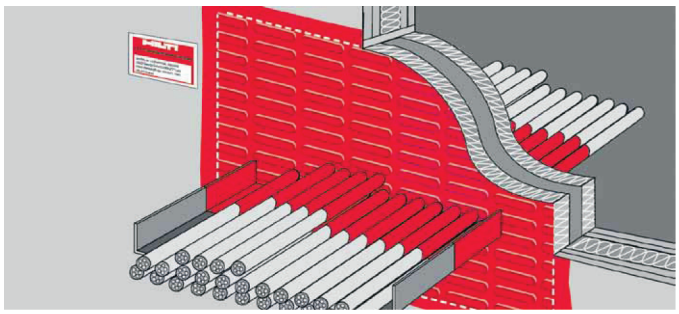

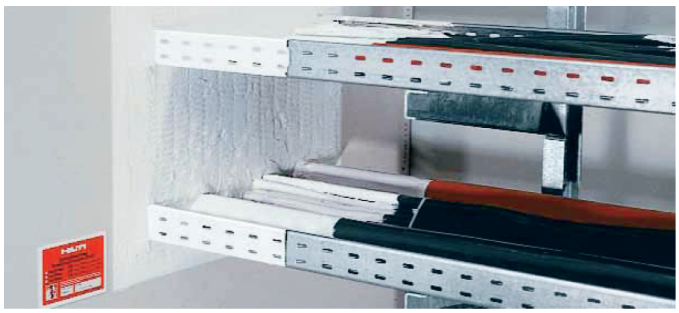

APPLICATIONS

- Permanent firestopping of blank openings, cables, cable trays, non-combustible and combustible pipes in medium to large wall and floor openings
- Ideal for large openings

ADVANTAGES

- Solvent- and silicone-free
- Fully functional immediately after installation
- Smoke tight

Technical data	
Base materials	Drywall, Concrete, Masonry
Approx. density	1470 kg/m³
Application temperature range	5 - 40 °C
Temperature resistance range	-40 - 100 °C
Storage and transportation temperature range	5 - 30 °C
Shelf life[1)]	15 Months
Colour	White

[1)] at 77°F/25°C and 50% relative humidity; from date of manufacture




Smoke


Water Tight


Acoustic


Siesmic




Mould & Mildew

Application Procedure


1. Clean the opening

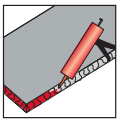
2. Coat cut edges with CP 606

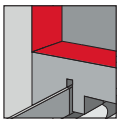
3. Fit CP 670

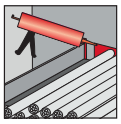
4. Fill gaps with CP 606


5. Fasten installation (if required)

Order Now **Watch Video**

Ordering designation	Weight	Sales pack quantity	Item number
ROCK WOOL 1.2X0.6-50/D160	-	5 pc	**3435517**
CP 670 6kg	6 kg	1 pc	**2281088**

Please visit Hilti website for the latest item numbers and related products

Copy Right Reserved By Hilti Corporation

Firestop board CP 670

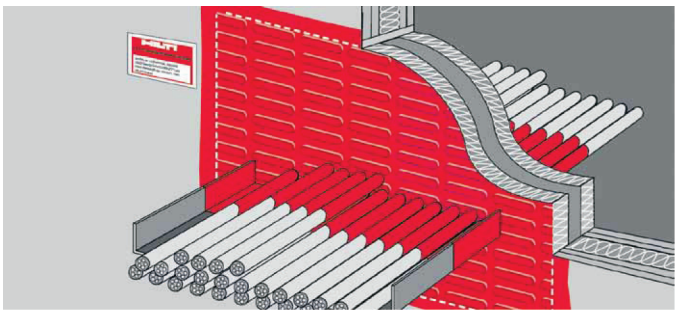



APPLICATIONS

- Permanent firestopping of blank openings, cables, cable trays, non-combustible and combustible pipes in medium-to-large wall and floor openings
- Ideal for large openings

ADVANTAGES

- Board pre-coated for immediate use
- Virtually no cracking or delamination during cutting
- Broad approval range

Technical data	
Base materials	Drywall, Concrete, Masonry
Dimensions (LxWxH)	1200 x 600 x 50 mm
Approx. board density	160 kg/m³
Application temperature range	5 - 40 °C
Temperature resistance range	-40 - 100 °C
Storage and transportation temperature range	0 - 40 °C
Colour	White



Smoke | Water Tight | Acoustic | Siesmic

Low VOC | Mould & Mildew

Application Procedure



1. Clean the opening

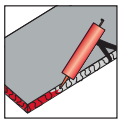

2. Coat cut edges with CP 606



3. Fit CP 670

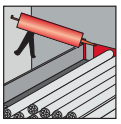

4. Fill gaps with CP 606



5. Fasten installation (if required)

Order Now **Watch Video**

Ordering designation	Dimensions (LxWxH)	Sales pack quantity	Item number
CP 670 1200x600x50 white	1200 x 600 x 50 mm	16 pc	**236673**

Please visit Hilti website for the latest item numbers and related products

Copy Right Reserved By Hilti Corporation

Firestop cushion CP 651N





APPLICATIONS

- Temporary sealing of openings in floors and walls through the construction phase

ADVANTAGES

- Quick and easy installation
- No special tools required
- Very economical in use thanks to optimized cushion dimensions
- Re-usable and thus economical
- Fully functional immediately after installation
- Tear-resistant and dust-free installation

Technical data	
Base materials	Drywall, Concrete, Masonry
Approx. density	350 kg/m³
Application temperature range	-30 - 35 °C
Temperature resistance range	-40 - 120 °C
Storage and transportation temperature range	-30 - 40 °C
Colour	White

Acoustic

Mould & Mildew

Application Procedure

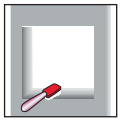

1. Clean opening

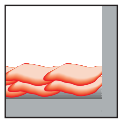

2. Cushion arrangement without cables in wall

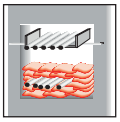

3. Cushion arrangement with cables in wall

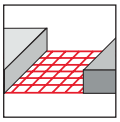

4. Fasten wire mesh in place when closing floor openings with cushions

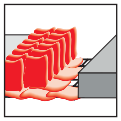

5. Cushion arrangement in floor

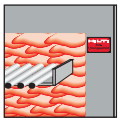

6. Fasten installation plate in place (If required)



Order Now **Watch Video**

Ordering designation	Dimensions (LxWxH)	Sales pack quantity	Item number
CP 651N-S	300 x 40 x 30 mm	30 pc	**382624**[1)]
CP 651N-M	300 x 80 x 30 mm	15 pc	**382625**[1)]
CP 651N-L	300 x 170 x 30 mm	6 pc	**382626**[1)]

[1)] This is a non-stock item. For detailed lead time information please contact yout Hilti representative.

Please visit Hilti website for the latest item numbers and related products

Copy Right Reserved By Hilti Corporation

Firestop bandage CFS-B





APPLICATIONS

- Firestopping around insulated (hot/cold) non-flammable pipes
- Pipe materials: copper, steel and other metals with heat conductivity lower than that of copper (e.g.cast iron, stainless steel etc.)
- Various insulation materials
- Suitable for use in openings in concrete, masonry block or drywall

ADVANTAGES

- Highly versatile - one product for a variety of insulation materials, pipe materials and pipe diameters
- Quick and easy to install - no drilling or additional tools needed
- No need to interrupt the pipe insulation material within the wall/ floor penetration
- Minimal thickness for easy installation in narrow gaps
- Good elasticity for optimum flexibility
- Very good acoustic insulation properties

Smoke Siesmic Low VOC Mould & Mildew

Technical data	
Base materials	Concrete, Masonry, Drywall
Expansion temperature (approx.)	210 °C
Expansion ratio (unrestricted, up to)	1:14
Storage and transportation temperature range	-5 - 50 °C
Length	10 m
Colour	Grey
Thickness	2 mm



Application table

CFS-B (Firestop Bandage - 2 mm thick)

Pipe diameter (mm)	Insulation Thickness (mm)	No. Layers	Reference Wrap length (mm)	No. of penetrations with a 10m roll	Recommened drill hole X (mm)
25	40	2	720	14	121
32	40	2	770	13	128
40	40	2	820	12	136
50	40	2	880	11	146
65	50	2	1100	9	181
80	50	2	1190	8	196
100	50	2	1320	8	216
125	50	2	1480	7	241
150	50	2	1630	6	266
200	50	3	2920	3	319
250	50	3	3390	3	369
300	65	3	4150	2	449
400	65	3	5090	2	549
400	75	3	5280	1.9	569

Application Procedure

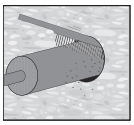

1. Clean the opening. The material around the opening must be dry, in sound condition and free from dust or grease.

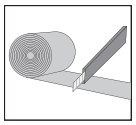

2. Cut Hilti Firestop Bandage CFS-B to fit the outside diameter of the insulation. Ensure 2 layers and an overlap.

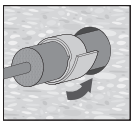

3. Wrap Hilti Firestop Bandage CFS-B around the insulation. Secure the bandage with steel bands or wire (≥ 0.7 mm).

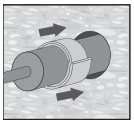

4. Install Hilti Firestop Bandage CFS-B on both sides of the open-ing to a depth of 62.5 mm (see marking on bandage).

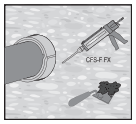

5. Close the remaining gap with the recommend gap filler. Refer to each base material for the correct filler.

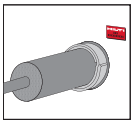

6. If it is necessary, an additional insulation over the bandage has to be installed. Mount the installation identification plate beside the correctly sealed opening, if required.

Order Now Watch Video

Ordering designation	Sales pack quantity	Item number
CFS-B	1 pc	**429557**

Please visit Hilti website for the latest item numbers and related products

Copy Right Reserved By Hilti Corporation

Firestop collar CP 643 N





APPLICATIONS

- Plastic pipes with diameters from 20 - 160 mm
- Suitable for PVC, PE and HDPE pipes
- For use in walls and floors
- Waste water pipes, fresh water pipes, drinking water pipes

ADVANTAGES

- Latch mechanism for quick and easy closure
- Allows correct installation where space is tight
- Flexible tab positioning for convenient fastening
- Ready-to-use product

Siesmic Low VOC Mould & Mildew

Technical data

Base materials	Concrete, Masonry, Drywall
Expansion temperature (approx.)	250 °C
Expansion ratio (unrestricted, up to)	1:17
Storage and transportation temperature range	-5 - 50 °C

Fixing Method

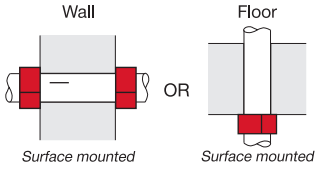

Surface mounted *Surface mounted*

Application Procedure

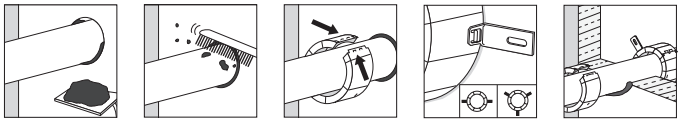

1. *Close remaining gap by mortar or by CP606 for smoke and acoustic seal*
2. *Clean plastic pipe*
3. *Close jacket*
4. *Attach fastening hooks*
5. *Repeat the same jacket installation procedure for the other side of the wall*

Order Now

Ordering designation	Pipe diameter - range	Collar outside diameter	Package contents	Sales pack quantity	Item number
CP643 1.5”/50 N (A2 SS) + HSA-R M6 5/-/-	20- 51 mm	67 mm	2x Std stud anchor HSA-R M6x50 5/-/-, 1x Firestop Jacket CP 643-50/1.5”N (A2 S.S)	1 pc	**3503533**
CP643 2”/63 N (A2 SS) + HSA-R M6 5/-/-	52 - 64 mm	82 mm	2x Std stud anchor HSA-R M6x50 5/-/-, 1x Firestop jacket CP 643-63/2” N (A2 S.S)	1 pc	**3503534**
CP643 2.5”/75 N (A2 SS) + HSA-R M6 5/-/-	65 - 78 mm	102 mm	3x Std stud anchor HSA-R M6x50 5/-/-, 1x Firestop jacket CP 643-72/2.5’ N (A2 S.S	1 pc	**3503535**
CP643 3”/90 N (A2 SS) + HSA-R M6 5/-/-	79 - 91 mm	117 mm	3x Std stud anchor HSA-R M6x50 5/-/-, 1x Firestop jacket CP 643-90/3” N (A2 S.S)	1 pc	**3503536**
CP643 4”/110 N (A2 SS) + HSA-R M6 5/-/-	92 - 115 mm	146 mm	3x Std stud anchor HSA-R M6x50 5/-/-, 1x Firestop jacket CP 643-110/4” N (A2 S.S)	1 pc	**3503538**
CP643 5”/125 N (A2 SS) + HSA-R M6 5/-/-	116 - 125 mm	166 mm	4x Std stud anchor HSA-R M6x50 5/-/-, 1x Firestop jacket CP 643-125/5” N (A2 S.S)	1 pc	**3503539**
CP643 6”/160 N (A2 SS) + HSA-R M6 5/-/-	126 - 170 mm	236 mm	4x Std stud anchor HSA-R M6x50 5/-/-, 1x Firestop jacket CP 643-160/6” N (A2 S.S)	1 pc	**3503540**

Ordering designation	Pipe diameter - range	Collar outside diameter	Sales pack quantity	Item number
Firestop Jacket CP 643-50/1.5”N (A2 S.S)	20- 51 mm	67 mm	1 pc	**3447172**
Firestop jacket CP 643-63/2” N (A2 S.S)	52 - 64 mm	82 mm	1 pc	**3447193**
Firestop jacket CP 643-72/2.5’ N (A2 S.S)	65 - 78 mm	102 mm	1 pc	**3447194**
Firestop jacket CP 643-90/3” N (A2 S.S)	79 - 91 mm	117 mm	1 pc	**3447195**
Firestop jacket CP 643-110/4” N (A2 S.S)	92 - 115 mm	146 mm	1 pc	**3447196**
Firestop jacket CP 643-125/5” N (A2 S.S)	116 - 125 mm	166 mm	1 pc	**3447197**
Firestop jacket CP 643-160/6” N (A2 S.S)	126 - 170 mm	236 mm	1 pc	**3447198**
CP 643-50/1.5” N	20 - 51 mm	67 mm	1 pc	**304325**
CP 643-63/2” N	52 - 64 mm	82 mm	1 pc	**304326**
CP 643-75/2.5” N	65 - 78 mm	102 mm	1 pc	**304327**
CP 643-90/3” N	79 - 91 mm	117 mm	1 pc	**304328**
CP 643-110/4” N	92 - 115 mm	146 mm	1 pc	**304329**
CP 643-125/5” N	116 - 125 mm	166 mm	1 pc	**304330**
CP 643-160/6” N	126 - 170 mm	236 mm	1 pc	**304331**

Please visit Hilti website for the latest item numbers and related products

Copy Right Reserved By Hilti Corporation

Firestop collar CP 644





APPLICATIONS

- Sealing flammable pipes from 180 mm to 250 mm in diameter in penetrations through fire compartment walls and floors

ADVANTAGES

- Ready-to-use firestop collar with a galvanized steel housing
- Latch mechanism for quick and easy closure
- Flexible hook positioning for convenient fastening

Technical data	
Base materials	Concrete, Masonry, Drywall
Expansion temperature (approx.)	210 °C
Expansion ratio (unrestricted, up to)	1:17
Storage and transportation temperature range	-5 - 50 °C
Colour	Metallic grey


Siesmic


Mould & Mildew

Fixing Method

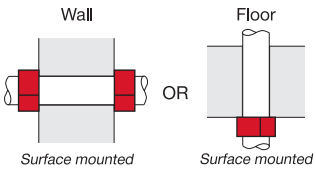

Application Procedure

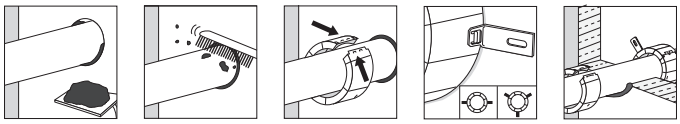

1. Close remaining gap by mortar or by CP606 for smoke and acoustic seal
2. Clean plastic pipe
3. Close jacket
4. Attach fastening hooks
5. Repeat the same jacket installation procedure for the other side of the wall

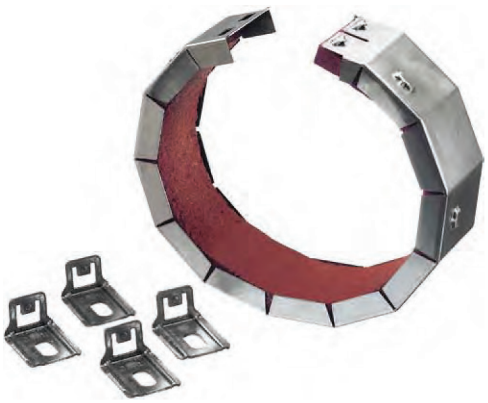

Order Now

Ordering designation	Collar outer diameter	Sales pack quantity	Item number
CP 644-180/7”	228 mm	1 pc	**304339**[1)]
CP 644-200/8”	257 mm	1 pc	**304340**[1)]
CP 644-225/9”	289 mm	1 pc	**304342**[1)]
CP 644-250/10”	319 mm	1 pc	**304343**[1)]
CP 644-250/10” US	319 mm	1 pc	**304344**[1)]

[1)] This is a non-stock item. For detailed lead time information please contact your Hilti representative.

Please visit Hilti website for the latest item numbers and related products

Copy Right Reserved By Hilti Corporation

Firestop collar endless CFS-C EL NEW





APPLICATIONS

- Suitable for use on shaft walls, coated board, drywall, aerated concrete, masonry and concrete
- Zero distance required to CFS-B firestop bandage, CFS-C EL firestop endless collar and Conlit
- Approved for use with PVC, PP, PE and a wide array of standard acoustic pipes.
- Configurations tested include pipe elbows, inclined pipes and pipes with limited clearance to the wall
- Acoustic pipes tested with insulation and sound decoupling

ADVANTAGES

- Flexible solution for waste water, roof drainage and pneumatic pipes
- Problem solver for non-standard applications
- Endless solution: one product for all applications
- Well-suited to complex pipe configurations
- Easy installation

Acoustic

Mould & Mildew

Technical data	
Base materials	Drywall, Aerated concrete, Concrete, Masonry
Expansion temperature (approx.)	210 °C
Expansion ratio (unrestricted, up to)	1:19
Storage and transportation temperature range	-30 - 50 °C
Length	3 m



Order Now

Watch Video

Ordering designation	Pipe diameter - range	Package contents	Sales pack quantity	Item number
CFS-C EL	16 -160 mm	1x Firestop bandage CFS-C EL, 18x Closure plate CFS-C EL, 22x Hook CFS-C EL short	1 pc	**2075120**

Please visit Hilti website for the latest item numbers and related products

Copy Right Reserved By Hilti Corporation

Firestop wrap strip CP 648-E



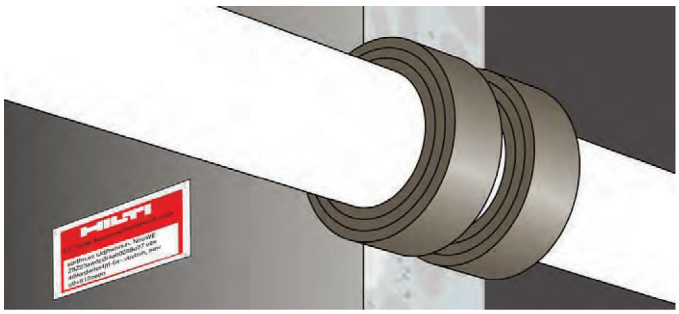

APPLICATIONS

- Combustible pipe penetrations

ADVANTAGES

- Quick and easy closure without tools
- Easy to cut
- Fast installation
- Highest flexibility

Acoustic · Siesmic · Low VOC · Mould & Mildew

Technical data	
Base materials	Concrete, Masonry, Drywall
Expansion temperature (approx.)	210 °C
Expansion ratio (unrestricted, up to)	1:19
Storage and transportation temperature range	-5 - 50 °C
Length	10 m
Colour	Grey, printed foil
Dimensions (LxWxH)	10000 x 45 x 5 mm
Height	5 mm

Application table

CP 648-E (Firestop Endless Wrap - 4.5 mm thick)

Pipe dimension (mm)	No. layers	Reference wrap length (cm)^^	No.of penetrations with a 10 m roll	Recommended drill hole X (mm)
20	1	7	142	37^
50	1	17	58	67^
63	1	21	47	77^
75	1	25	40	92^
90	2	64	15	112^
110	2	75.5	13	132^
125	2	85.5	11	152^
160	3	166	6	202^

^ or bigger ^^ The wrap lenght should



Application Procedure

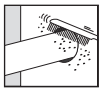

1. Clean the plastic pipe.

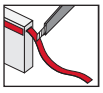

2. Cut CP 648-E to the correct length (see measurement table on product packaging for help).

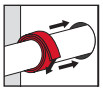

3. Wrap the CP 648-E around the pipe, fas-ten it with adhesive tape and push it into the annular space.

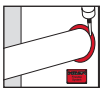

4. Close remaining gap to ensure smoke and gas tight seal. Fasten instal lation plate if required.

Fixing Method

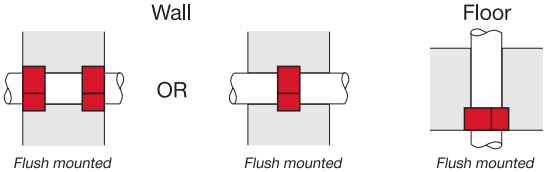

Flush mounted · *Flush mounted* · *Flush mounted*

Order Now

Ordering designation	Sales pack quantity	Item number
CP 648-E-W45/1.8”	1 pc	**304310**

Please visit Hilti website for the latest item numbers and related products

Copy Right Reserved By Hilti Corporation

Firestop cast-in device CFS-CID NEW





APPLICATIONS

- Concrete slabs built with traditional formwork
- New building construction
- Sealing combustible and non-combustible pipe penetrations
- Tested with pipe elbows, which allows reduced service zone

ADVANTAGES

- One-step firestop solution for a variety of pipe materials and diameters - no additional backfilling required
- Modular connection allows close placement of multiple penetrations
- Quick and simple installation
- Integrated moisture and smoke seal
- Lid strong enough to carry foot traffic and light access equipment

Smoke

Mould & Mildew

Acoustic

Low VOC

Technical data	
Base materials	Concrete
Approvals	EN 13501-2: 2007+A1:2009, EN 1366-3:2009
Height	250 mm
Application temperature range	-5 - 50 °C
Temperature resistance range	-20 - 100 °C
Colour	Red
Re-penetration	Easy
Reaction to fire class (EN 13501-1)	E



Application Procedure

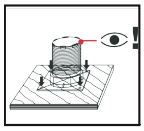

1. Place anchor channel into formwork and fixing to the wood formwork with nails and stamples / fixing to the steel formwork with rivets. Ensure cover is tightened to prevent concrete from going in cast-in device.



2. Cast in concrete. Concrete level should be equal or lower than overall height of cast-in device.

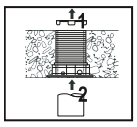

3. Remove the cast-in device cover.Insert penpetrating pipe into cast-in device.

Order Now

Watch Video

Ordering designation	Pipe diameter - Range	Sales pack quantity	Item number
CFS-CID 50	40 - 63 mm	1 pc	**2124523**
CFS-CID 75	50 - 75 mm	1 pc	**2124524**
CFS-CID 110	80 - 110 mm	1 pc	**2124525**
CFS-CID 160	125 - 160 mm	1 pc	**2124526**

Please visit Hilti website for the latest item numbers and related products

Copy Right Reserved By Hilti Corporation

Firestop sleeve CFS-SL NEW





APPLICATIONS

- Sealing penetrations with single cables and cable bundles
- Suitable for small to medium-sized circular openings in walls, ceilings and floors
- For use on concrete, masonry and drywall

ADVANTAGES

- Quick and easy to install and inspect
- Fully functional immediately after installation
- Robust
- Optimum smoke-restriction performance
- Easy maintenance and retro-fitting of cables

Technical data	
Base materials	Concrete, Masonry, Drywall
Expansion temperature (approx.)	160 °C
Intumescent	Yes
Storage and transportation temperature range	-5 - 50 °C
Application temperature range	-5 - 50 °C
Temperature resistance range	-30 - 100 °C
Approvals	FM, UL, BS, EN
Reusable (and removable)	Possible
Acoustics performance	Test report available

Acoustic Siesmic Low VOC Mould & Mildew



Application Procedure

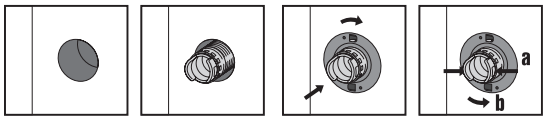

1a. For a 2" sleeve: use a 2.5" hole saw to create a hole.
1b. For a 4" sleeve: use a 4.5" hole saw to create a hole.

2. Insert the sleeve.

3. Insert and spin the flange clockwise onto the device until you reach the wall. Repeat on other side of the wall.

4. To open the device: (a) On one side of the wall, press the clip closures inward. (b) Twist the device counterclockwise.

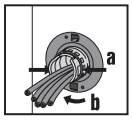

5. To close the device: (a) On the same side of the wall, press the clip closure inward. (b) Twist the device clockwise intil finger-tight, allowing it to engage with a click.

Order Now Watch Video

Ordering designation	Sales pack quantity	Item number
CFS-SL M	1 pc	**2019718**[1)]
CFS-SL L	1 pc	**2075168**[1)]

[1)] This is a non-stock item. For detailed lead time information please contact your Hilti representative.

Please visit Hilti website for the latest item numbers and related products

Copy Right Reserved By Hilti Corporation

Firestop cable coating CP 678





APPLICATIONS

- Protection of cables and bunched cables on cable trays in indoor installations
- Meets IEC 60332-3-22 Category A standard for reduced spread of flame
- Factory Mutual Approved (fire retardant coating of electrical cables)
- For use in power plants, telecommunications complexes, industrial plants, petrochemical plants, paper mills, factories and production facilities
- Easy to apply using a paint brush or airless spray gun

Technical data	
Chemical basis	Acrylate
Weight	20 kg
Application temperature range	5 - 40 °C
Temperature resistance range	-30 - 80 °C
Storage and transportation temperature range	5 - 30 °C
Shelf life[1)]	18 Months
Colour	White

[1)] at 77°F/25°C and 50% relative humidity; from date of manufacture

ADVANTAGES

- Intumescent
- Water soluble, odourless and solvent free
- Free of fibres and asbestos
- No derating effects on cables
- Rapid drying, remains flexible when dry
- Compatible with the sheathing of electrical cables



Siesmic Low VOC Mould & Mildew

Consumption Guide

Test Standard	Dry film thickness	Wet film thickness	Approx. Requirement
IEC 60332-3	1.0 mm coating	1.4 mm coating	1.8 kg/m² (1.4 liters/m²)
Factory Mutual Approval	1.6 mm coating	2.2 mm coating	2.86 kg/m² (2.2 liters/m²)

Note (a): Each 20 kilogram container of CP 678 contains approximately 15.4 liters.

Note (b): For cable trays or cable bundles with large cables, allow approx. 10% wastage for application by brush or roller. For cable trays or cable bundles with small cables, allow approx. 20% wastage for application by brush or roller.

Application Procedure

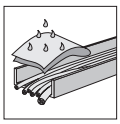
Clean cables


Mix coating


Apply coating

Order Now

Ordering designation	Weight	Package contents	Sales pack quantity	Item number
CP 678 20KG	20 kg	1x Firestop cable coating CP 678	1 pc	**2348155**

Please visit Hilti website for the latest item numbers and related products

Copy Right Reserved By Hilti Corporation

Dispenser foam CF125-50

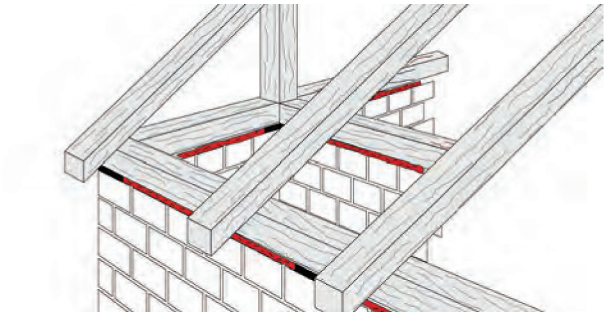

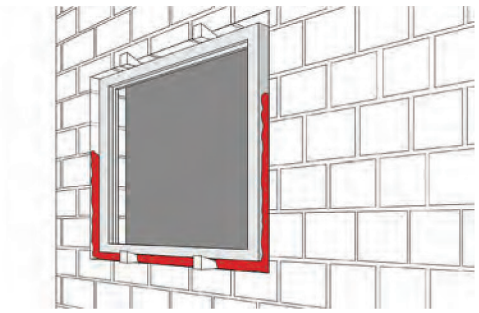

APPLICATIONS

- Insulating gaps around window frames, cooling equipment and pipes, heating pipes, baths, wood floors, air-conditioning equipment, air ducts

ADVANTAGES

- High yield
- Stop-and-go controlled dispensing
- Economical in use

Technical data	
Chemical basis	Polyurethane
Content per can/cartridge	750 ml
Foam yield (up to)	50 l
Approx. tack-free time (at 23°C / 50% rel. humidity)	10 min
Approx. cut time (at 23°C / 50% rel. humidity)	20 min
Min. time before loadbearing	Approx. 3-5 h
Temperature resistance range	-30 - 80 °C
Storage and transportation temperature range	5 - 25 °C
Thermal conductivity (λ approx. value)	0.04 W/mK
Shelf life[1)]	12 Months

[1)] at 77°F/25°C and 50% relative humidity; from date of manufacture



Order Now

Ordering designation	Sales pack quantity	Item number
CF 125-50 750ML	1 pc	**259628**

Please visit Hilti website for the latest item numbers and related products

Related products on page

Consumables 362-363

Copy Right Reserved By Hilti Corporation

Filling foam CF-F 750

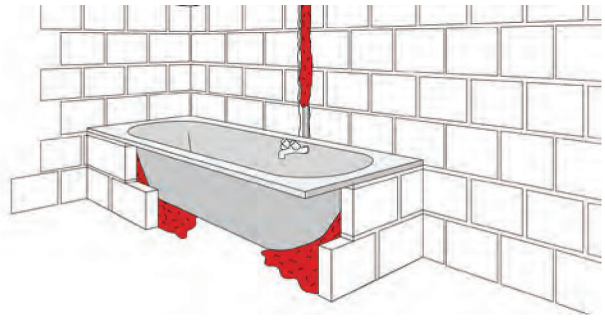

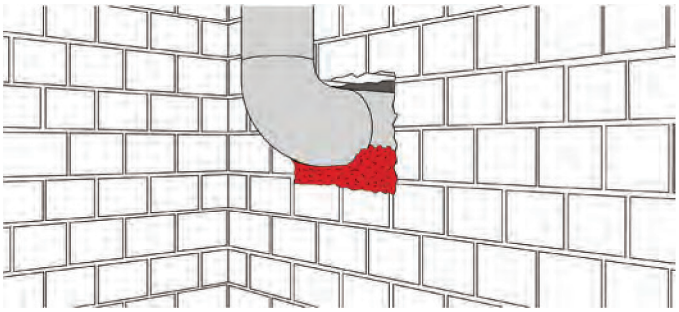

APPLICATIONS

- Gaps and cracks
- Drywall voids
- Electrical voids
- Backfilling for sealants
- Holes left by concrete forms
- Mechanical gaps

ADVANTAGES

- Easy to use - finger dispensing
- High adhesive strength
- Restricts air infiltration
- High yield

Technical data	
Chemical basis	Polyurethane
Content per can/cartridge	750 ml
Foam yield (up to)	34 l
Approx. cut time (at 23°C / 50% rel. humidity)	30 min
Min. time before loadbearing	Approx. 3-5 h
Temperature resistance range	-40 - 80 °C
Storage and transportation temperature range	5 - 25 °C
Thermal conductivity (λ approx. value)	0.04 W/mK
Shelf life[1)]	12 Months

[1)] at 77°F/25°C and 50% relative humidity; from date of manufacture



Order Now

Ordering designation	Sales pack quantity	Item number
CF-F 750	1 pc	**369811**

Please visit Hilti website for the latest item numbers and related products

Related products on page

Consumables 362

Copy Right Reserved By Hilti Corporation

Cleaner CFR 1



APPLICATIONS

- Dissolves uncured polyurethane foam
- Cleans CF-DS1 dispenser surfaces
- May be used with the CF-DS1 to improve throughput, if required

Technical data	
Application temperature - max.	30 °C
Application temperature - min.	5 °C
Application temperature range	5 - 30 °C

ADVANTAGES

- Easily removes fresh uncured foam
- Cleans fresh spillage of uncured foam from most common jobsite surfaces
- Includes a nozzle tip for cleaning dispenser surfaces as well as the can dispenser adapter

Order Now

Ordering designation	Sales pack quantity	Item number
Cleaner CFR1 500ML	1 pc	**20162**

Please visit Hilti website for the latest item numbers and related products

Related products on page

Consumables 360-361

Copy Right Reserved By Hilti Corporation

CP PRODUCTS TESTED FOR

At least 13 other types of test have been carried out covering properties such as water tightness, chemical compatability, explosion resistance, radiation resistance, mould resistance, electrical resistance, etc.

CP 606	Low VOC	Fire	Smoke /Gas Tightness	Water Tightness	Acoustic Insulation	Siesmic	30 ans Resistance to Aging*
CP 601S	Low VOC	Fire	Smoke /Gas Tightness	Water Tightness	Acoustic Insulation	Siesmic	30 ans Resistance to Aging*
FS-One Max	Low VOC	Fire	Smoke /Gas Tightness	Water Tightness	Acoustic Insulation	Siesmic	30 ans Resistance to Aging*
CP 611A	Low VOC	Fire	Smoke /Gas Tightness	Water Tightness	Acoustic Insulation	Siesmic	30 ans Resistance to Aging*
CFS-SP WB	Low VOC	Fire	Smoke /Gas Tightness	Water Tightness	Acoustic Insulation	Siesmic	30 ans Resistance to Aging*
CP 617	Low VOC	Fire			Acoustic Insulation		PLANNED
CFS-D	Low VOC	Fire					PLANNED
CP 620	Low VOC	Fire	Smoke /Gas Tightness	Water Tightness	Acoustic Insulation	Siesmic	30 ans Resistance to Aging*
CFS-F FX	Low VOC	Fire	Smoke /Gas Tightness		Acoustic Insulation	Siesmic	30 ans Resistance to Aging*
CFS-BL	Low VOC	Fire	Smoke /Gas Tightness		Acoustic Insulation	Siesmic	30 ans Resistance to Aging*
CP 636	Low VOC	Fire			Acoustic Insulation	Siesmic	30 ans Resistance to Aging*
CP 670	Low VOC	Fire	Smoke /Gas Tightness	Water Tightness	Acoustic Insulation	Siesmic	30 ans Resistance to Aging*
CP 651 N		Fire	WITH SEALANT		Acoustic Insulation		30 ans Resistance to Aging*
CFS-B	Low VOC	Fire	WITH SEALANT	WITH SEALANT	Acoustic Insulation	Siesmic	30 ans Resistance to Aging*
CP 643 N	Low VOC	Fire	WITH SEALANT	WITH SEALANT	NOT APPLICABLE	Siesmic	30 ans Resistance to Aging*
CFS-C EL	Low VOC	Fire	WITH SEALANT	WITH SEALANT	Acoustic Insulation	Siesmic	30 ans Resistance to Aging*
CP 648-E	Low VOC	Fire	WITH SEALANT	WITH SEALANT	Acoustic Insulation	Siesmic	30 ans Resistance to Aging*
CFS-CID	Low VOC	Fire	Smoke /Gas Tightness		Acoustic Insulation		PLANNED
CFS-SL	Low VOC	Fire			Acoustic Insulation	Siesmic	30 ans Resistance to Aging*
CP 678	Low VOC	Fire				Siesmic	PLANNED

*Fire resistance test reports / approvals / certificates normally do not contain any information on the service life of a firestop product / assembly. By carrying out own additional ageing tests which simulate extreme temperature / humidity conditions, Hilti provides its customers with a very high level information on product reliability and service life expectancy of the Hilti firestop systems. On the basis of the ageing cycles obtained in these test procedures as well as of experience gained in the field of concrete construction, it can be assumed that Hilti firestop systems have a service life (ageing resistance) of approximately 30 years from manufacturing date.
Please note that this expected long-term ageing resistance of Hilti firestop systems, which is given on the basis of the above-mentioned tests, depends on a number of factors on which Hilti basically has no influence (e.g. environmental factors such as extreme environmental conditions, e.g. chemicals, etc.) and, therefore, are subject to the following conditions which must be strictly observed by the user with regard to the respective Hilti firestop system:

- Strict adherence to the Hilti's operating, setting, installing and other technical instructions;
- Rigorous compliance with all other conditions set in the respective specifications during the lifetime of the Hilti firestop systems, in particular with regard to regular control and maintenance as well as to foreseeable use under normal climatic condition in the respective field of application.

PRODUCTS APPROVALS AND TESTING

					Page
CP 606	British Standard BS 476-20	BS EN 1366-3	FM APPROVED	CLASSIFIED C UL US	54
CP 601S	British Standard BS 476-20	BS EN 1366-3		CLASSIFIED C UL US	55
FS-One Max	British Standard BS 476-20		FM APPROVED	CLASSIFIED C UL US	56
CP 611A	British Standard BS 476-20	BS EN 1366-3			57
CFS-SP WB		BS EN 1364-4 BS EN 1364-3	FM APPROVED	CLASSIFIED C UL US	58
CP 617	British Standard BS 476-20	BS EN 1364-1	FM APPROVED	CLASSIFIED C UL US	59
CFS-D	British Standard BS 476-6&7	BS EN 1366-3	FM APPROVED	CLASSIFIED C UL US	60
CP 620	British Standard BS 476-20		FM APPROVED	CLASSIFIED C UL US	61
CFS-F FX	British Standard BS 476-20	BS EN 1366-3			62
CFS-BL	British Standard BS 476-20	BS EN 1366-3	FM APPROVED	CLASSIFIED C UL US	63
CP 636	British Standard BS 476-20	BS EN 1366-3	FM APPROVED	CLASSIFIED C UL US	65
CP 670	British Standard BS 476-20	BS EN 1366-3			66-67
CP 651N	British Standard BS 476-20	BS EN 1366-3			68
CFS-B	British Standard BS 476-20	BS EN 1366-3			69
CP 643 N	British Standard BS 476-20	BS EN 1366-3	FM APPROVED	CLASSIFIED C UL US	70
CFS-C EL	British Standard BS 476-20	BS EN 1366-3			72
CP 648-E	British Standard BS 476-20	BS EN 1366-3	FM APPROVED	CLASSIFIED C UL US	73
CFS-CID	British Standard BS 476-20	BS EN 1366-3			74
CFS-SL	British Standard BS 476-20	BS EN 1366-3	FM APPROVED	CLASSIFIED C UL US	75
CP 678	British Standard BS 476-6&7		FM APPROVED		76

Copy Right Reserved By Hilti Corporation

FOR PEACE OF MIND

Firestop Engineering Services

Prevention of spread of smoke and fire often presents challenges for planners and installers and demand considerable administrative work. We provide comprehensive firestop engineering service to allow planners, building owners, designers and supervisory team to simply and efficiency carry out firestop design and inspection work.



FIRESTOP ENGINE

FIRESTOP SYSTEM DESIGN PROPOSAL

Objective: To protect assets and fulfill required building performance

Seminar & site walk to go through site condition for firestopping system

Made to fit firestop proposal to suit different application systems on site







EERING SERVICES

FIRESTOP SYSTEM POST-INSTALLATION CHECKING TRAINING

Objective: To safeguard proper installation of firestop system to minimize any unexpected rework

Professional training to go through inspection checklist

Documentation report to record installation against inspection checklist







Important notice

1. Construction materials and conditions vary on different sites. If it is suspected that the base material has insufficient strength to achieve a suitable fastening, contact the Firestop Technical Team.

2. The information and recommendations given herein are believed to be correct at the time of writing. The data has been obtained from tests under laboratory or other controlled conditions and it is the users responsibility to use the data given in the light of conditions on site and taking into account the intended use of the products concerned.

Whilst Hilti can give general guidance and advice, the nature of Hilti products means that the ultimate responsibility for selecting the right product for particular applications must lie with the customer.

3. All products must be used, handled and applied in accordance with all current instructions for use published by Hilti.

4. All products are supplied, and advice given, subject to Hilti's terms of business.

5. Hilti's policy is one of continuous development. We therefore reserve the right to alter specifications etc. without notice.

Right of technical and programme changes reserved S.E.& O; no liability accepted for printing errors or other deficiencies; earlier sales catalogues are thus rendered non valid.

Hilti = registered trademark of Hilti Corp. Schaan

TAI KOK TSUI HILTI STORE



Shop 2, G/F, Lime Stardom, No.1 Larch Street, Tai Kok Tsui, Kowloon, Hong Kong

MACAU HILTI STORE

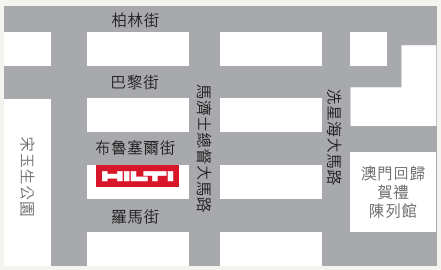

Rua De Bruxelas, S/N Edigicio, Kin Heng Long, Loja, W-R/C, Macau

Hilti (Hong Kong) Limited
701-704 & 708B, 7/F, Tower A, Manulife Financial Centre, 223 Wai Yip Street, Kwun Tong, Kowloon, Hong Kong
Customer Hotline: +852 8228 8118 (Hong Kong) 00800 8228 8118 (Macau Toll Free) I Fax: +852 2954 1751
hksales@hilti.com I www.hilti.com.hk I Hilti Hong Kong

Hilti = registered trademark of Hilti Corp., Schaan LI | 10/2018 Right of technical and programme changes reserved S.E. & O.